YOSHIMURA
RESEARCH&DEVELOPMENT OF AMERICA, INC.
5420 DANIELS STREET STE A, CHINO CA., 91786 · (800)634-9166 · (909)628-4722 · FACSIMILE (909)591-2198
www.yoshimura-rd.com

TRS TRI-OVAL PERFORMANCE EXHAUST SYSTEM

SUZUKI 2001-04 GSX-R1000

111506 (3,6,8)	TRS TRI-OVAL STAINLESS STEEL DUPLEX RACE ONLY HIGH PIPE SYSTEM
111512 (3,6,8)	TRS TRI-OVAL TITANIUM DUPLEX RACE ONLY HIGH PIPE SYSTEM

Important technical note: Please see page 4 for detailed application information.

** This system is designed for closed circuit competition use only and requires removal of right rear signal light.

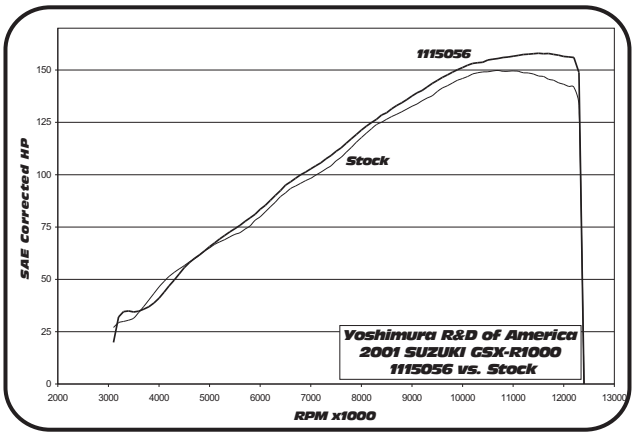

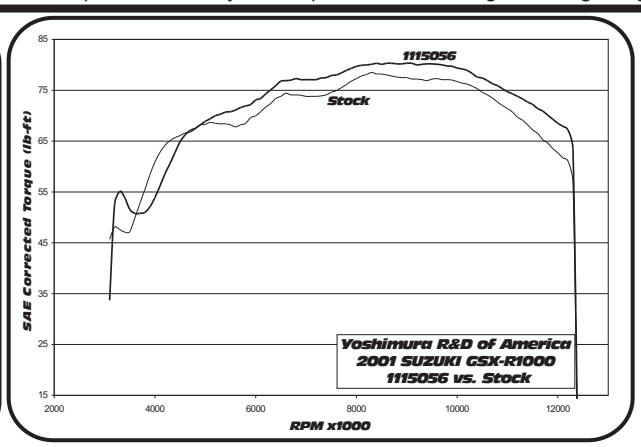

Note: Dyno graphs are for comparison use only. Actual results may vary depending on operating and motorcycle condition.

THIS PRODUCT IS DESIGNED FOR USE IN CLOSED COURSE RACING AND IS NOT INTENDED FOR HIGHWAY USE.

NOTE: IN THE STATE OF CALIFORNIA, IT IS ILLEGAL TO MODIFY THE EMISSION CONTROL SYSTEM. WHICH INCLUDES THE CARBURETORS OF ANY VEHICLE.

Caution: Exhaust system can be extremely hot. Let motorcycle cool down before beginning installation.

Note: Read through all instructions before beginning installation.

Tools Needed:

10mm and 12mm socket
3/8" ratchet and extension
12mm wrench
4mm Allen wrench
6mm Allen wrench for torque wrench
Torque wrench
Soft Face Mallet

Installation Steps:

1 Remove left, right and lower cowlings. (See Fig.1 & 2 for fastener locations)

2 Remove lower oil cooler bracket and radiator mount bolts and tilt radiator forward slightly. (See Fig. 3)

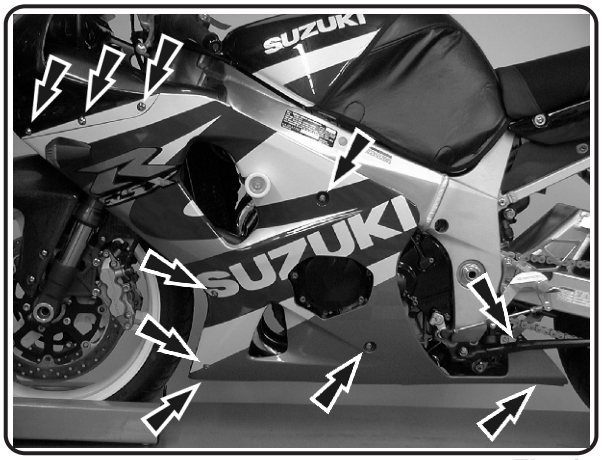

Fig. 1

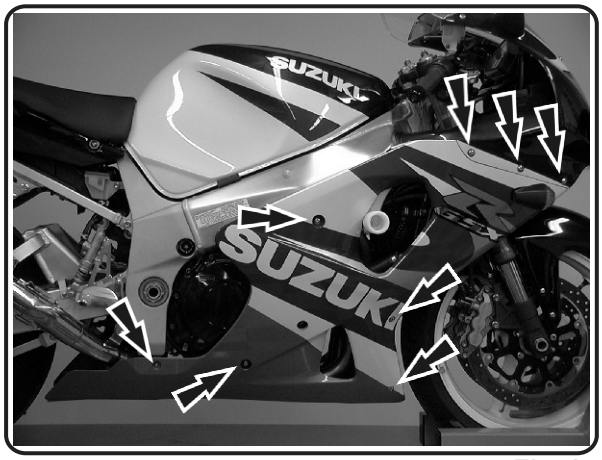

Fig. 2

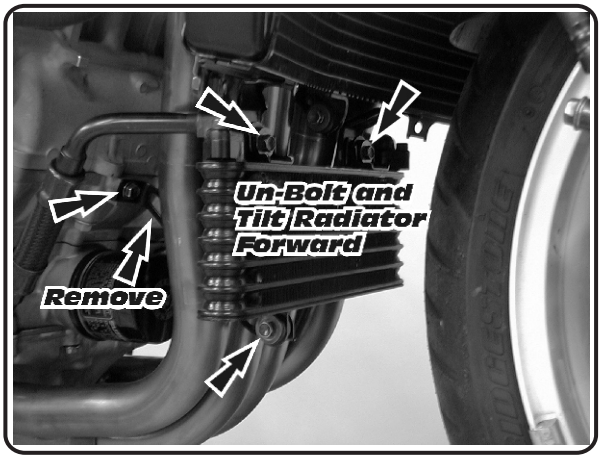

Fig. 3

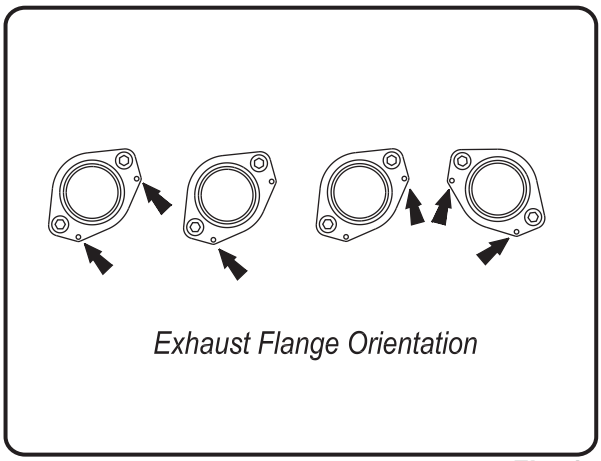

Fig. 4

3 Disconnect the tail-pipe exhaust valve cables at EXCVA servo located under fuel tank. (Refer to owner's service manual for removal instructions.)

4 Unbolt the stock muffler and tail-pipe from the passenger foot rest mount and frame chassis mount, then remove stock muffler assembly from collector outlet.

5 Remove stock exhaust system header and exhaust port gaskets.

NOTE: 2003-2004 Model bikes should NOT have exhaust port gaskets installed when installing Yoshimura manifolds . Otherwise there may be insufficient clearance between the header, oil cooler, and/or radiator.)

7 Install supplied manifolds and flanges into exhaust ports using stock bolts. Torque bolts to 1.0 Kg-m (7.3 lb-ft). (Refer to Fig. 4 on Page 2 for proper flange orientation.)

8 Install Yoshimura header from one end of the engine to the other by slipping one tube at a time into manifolds.

9 Install 2-1/2" exhaust springs into flange spring holes. (Hook one end of the spring through drilled hole then pull the other end with supplied spring puller tool onto header's spring hook.) (See Fig.4)

10 With a soft face mallet, tap on header to fully seat tubes into manifolds.

11 Install supplied Yoshimura aluminum muffler bracket using supplied bolts and stock nuts.

12 Install Yoshimura tail-pipe w/muffler onto header and install 3 1/2" springs between header and tailpipe.

13 Bolt tail-pipe chassis mount bracket to inside of chassis mount with stock bolt and supplied nut. (See Fig. 5) Torque bolt to 2.5 kg-m (18 lb-ft)

14 Apply heat insulator to inside of muffler clamp and slide clamp onto muffler.
(note direction of clamp in Fig. 6)

15 Mount muffler clamp to the inside of Yoshimura muffler bracket using supplied bolt and washer with stock nut. (see Fig. 6)
Torque bolt to 2.5 kg-m (18 lb-ft).

16 It is recommended that the entire exhaust system be wiped down with rubbing alcohol to remove oil and fingerprints. This will help prevent tarnishing of the finish after the exhaust is heated up.

17 Re-install lower oil cooler bracket and radiator mount bolt.

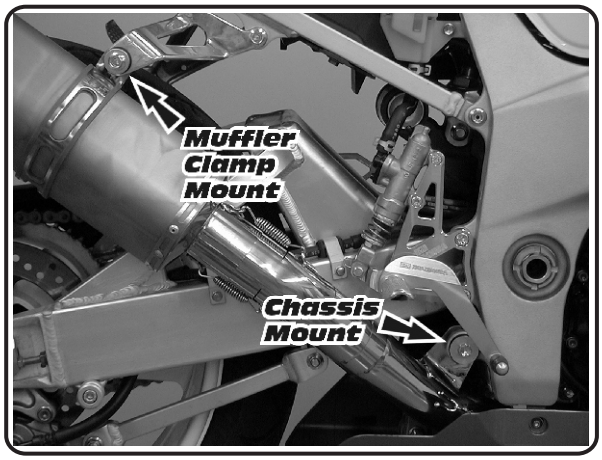

Fig. 5

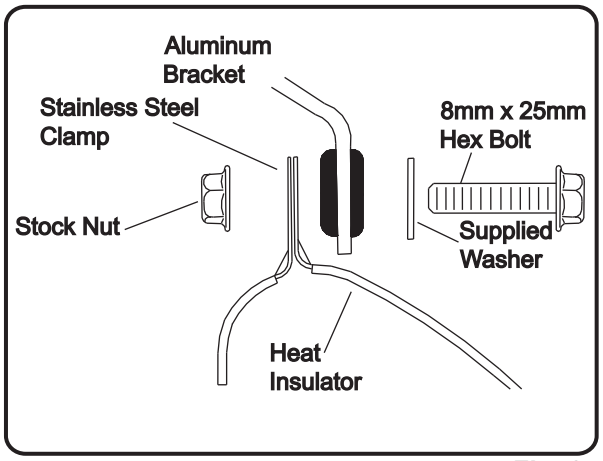

Fig. 6

18 Before starting motorcycle, check for proper clearance between new exhaust system and motorcycle. (i.e. radiator, oil pan, swing-arm, etc.) If any problem is found, please carefully follow through the installation steps again. If problem still persists, please call Yoshimura tech. dept. at (800)634-9166 / in CA (909)628-4722.

19 Reinstall cowlings.

20 Check for proper clearances between new exhaust system and cowlings before starting the motorcycle.

Note: After starting motorcycle, it is normal for new exhaust system to emit smoke until oil residue burns off.

2001-2002 GSX-R1000 ONLY
2003-2004 (SEE PAGE 5)

20 It is necessary to properly disable the Suzuki SET (Suzuki Exhaust Tuning) system by following the steps listed below. Without properly disabling the SET system the engine will run in a power limited fail-safe mode.

21 With ignition in OFF position, remove rider seat and disconnect engine wire harness connectors from ECU. (See Fig. 7)

22 Depress rectangular white plastic locking plate on the 34 pin ECU connector to unlock connector pins. (See Fig. 8)

23 Pull out black wire with brown stripe. (See Fig. 9&9A)

24 Press the protruding two small rectangular white plastic tabs on ECU connector to lock connector pins. (See Fig. 10) The white plastic locking plate should click into place with minimal force when all remaining pins are bottomed against connector.

25 Tape and secure disconnected wire.

26 Reconnect engine ECU and reinstall rider seat.

※ Important technical note: Detailed application information.

On 2002 GSXR1000s the SET servo, under the tank, cannot be removed when installing a Yoshimura exhaust that eliminates the SET valve.

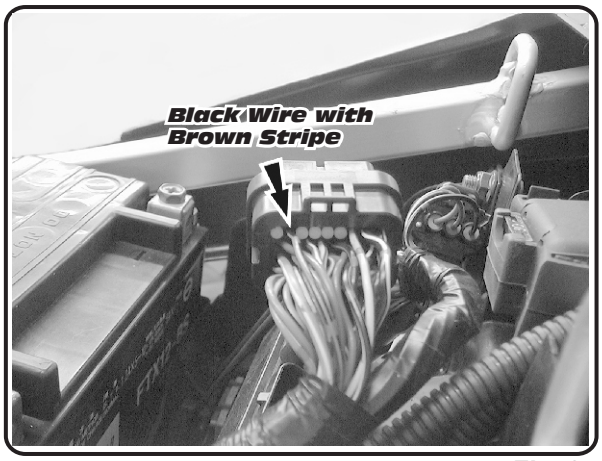

Fig. 9

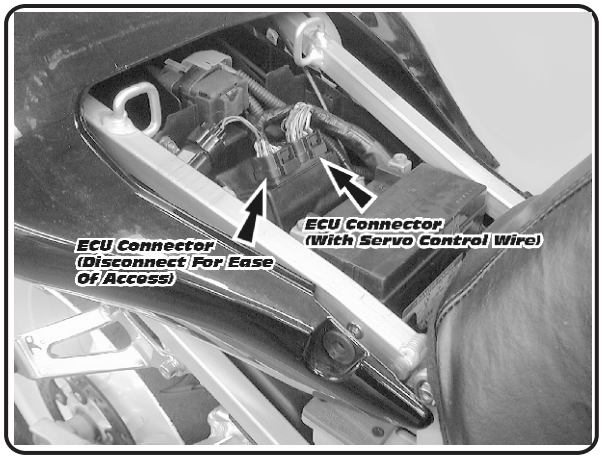

Fig. 7

Fig. 8

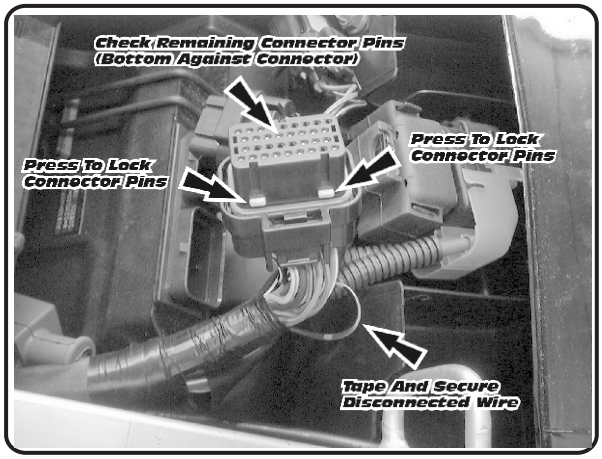

Fig. 10

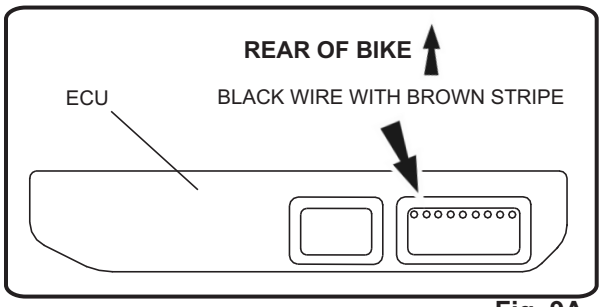

Fig. 9A

2003-2004 GSX-R1000 ONLY

1 With ignition in OFF position, remove rider seat and disconnect engine wire harness connectors from ECU. (See Fig. 10)

2 Depress rectangular white plastic locking plate on the 34 pin ECU connector to unlock connector pins. (See Fig. 11)

3 Pull out black wire with brown stripe. (See Fig. 13 & 14)

4 Press the protruding two small rectangular white plastic tabs on ECU connector to lock connector pins. (See Fig. 12) The white plastic locking plate should click into place with minimal force when all remaining pins are bottomed against connector.

5 Tape and secure disconnected wire.

6 Reconnect engine ECU and reinstall rider seat.

※ Important technical note: Detailed application information.

On 2003-04 GSXR1000s the SET servo, under the tank, cannot be removed when installing a Yoshimura exhaust that eliminates the SET valve.

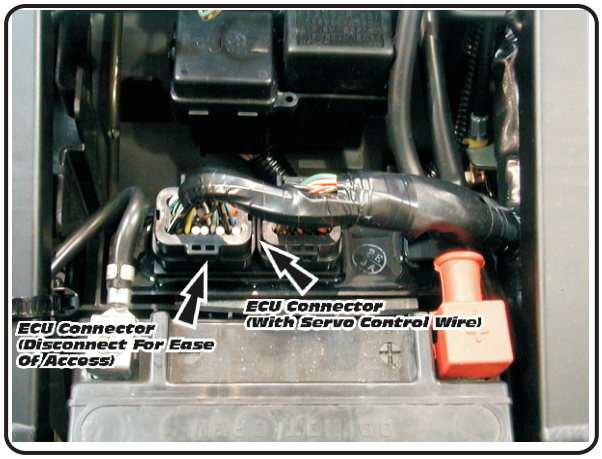

Fig. 10

Fig. 11

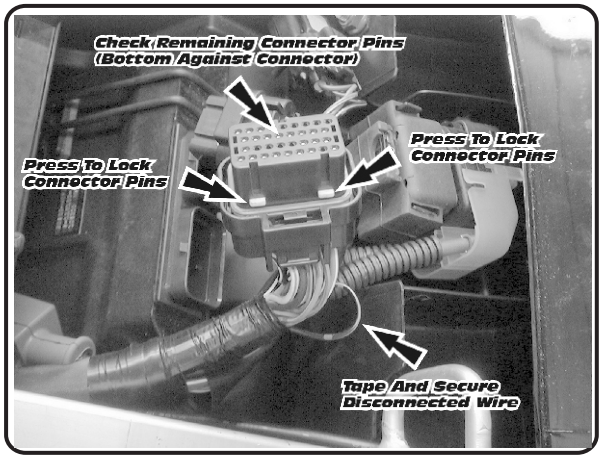

Fig. 12

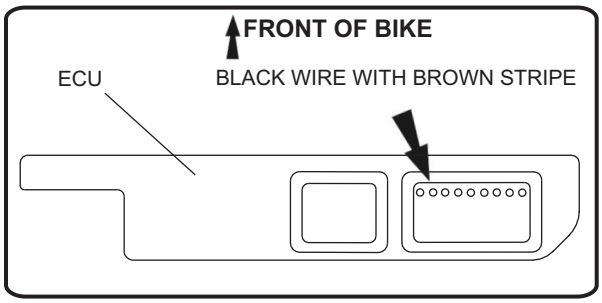

Fig. 13

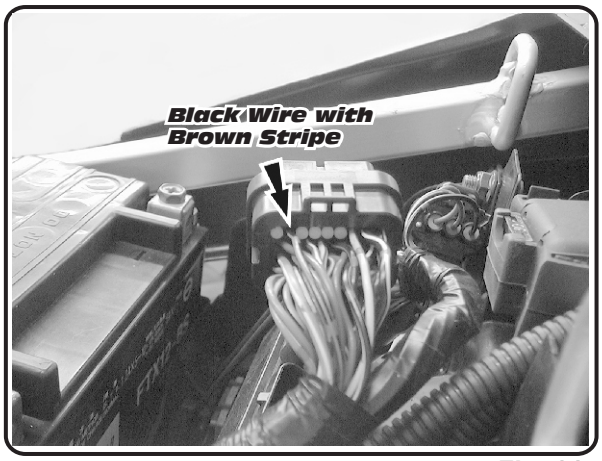

Fig. 14

#111506(3,6,8) / #111512(3,6,8)

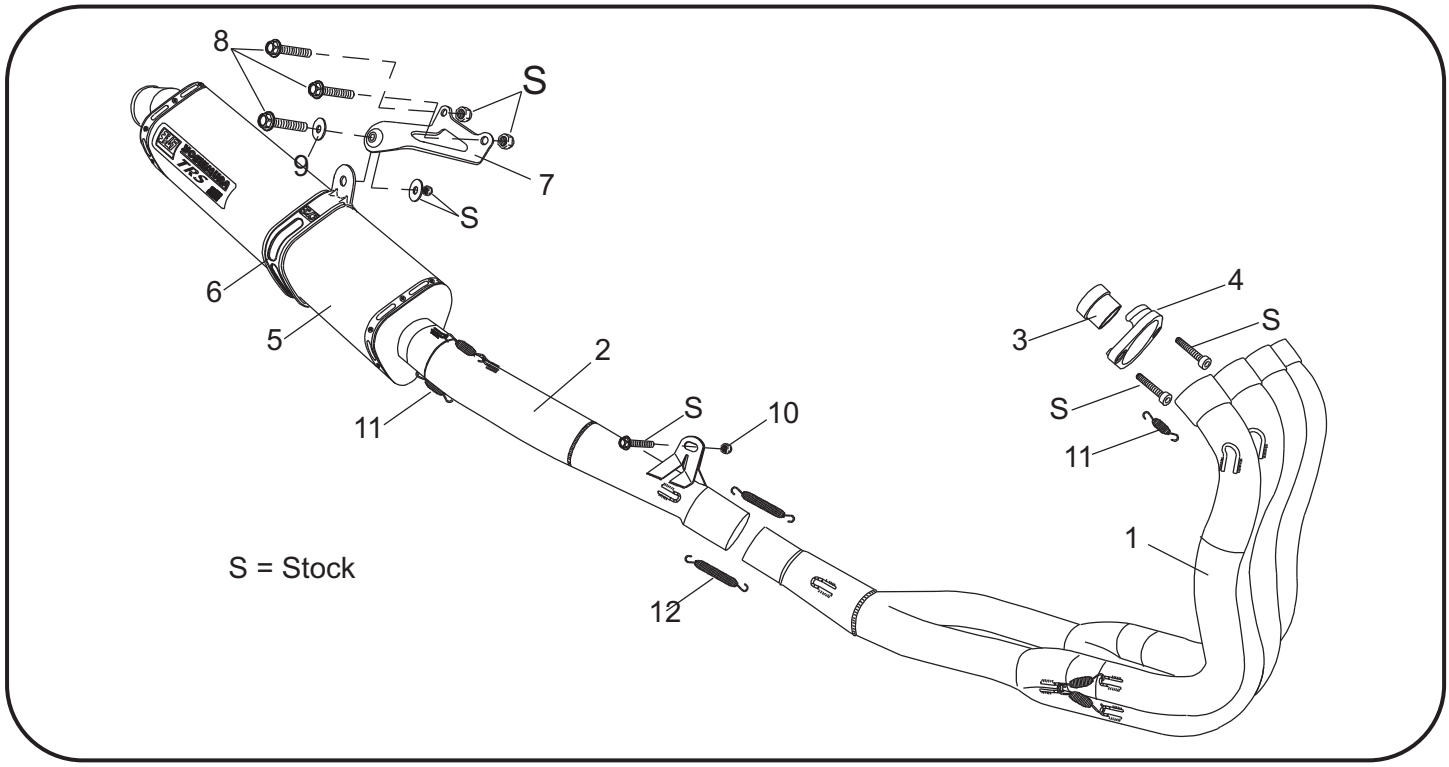

Parts Diagram

NO.	DESCRIPTION	QTY	PART #
1	Yoshimura Header	1	
	Stainless Steel Duplex Race Only		1115-404
	Titanium Duplex Race Only		1115-704
2	Yoshimura Tailpipe	1	
	Stainless Steel Race High Exit		1115-421
	Titanium Race High Exit		1115-721
3	Stainless Steel Exhaust Manifold	4	R795SDM
4	Stainless Steel Exhaust Flange	4	YZ117SDR
5	TRS TRI-Oval Muffler Assembly	1	**
6	TRS Stainless Steel Muffler Clamp	1	
	Stainless Steel or Titanium Sleeve use		CTS081X
	Carbon Fiber Sleeve use		CTS081
7	Yoshimura Aluminum Muffler Bracket	1	R656AB
8	Bolt, Flange Head, 8mm x 25mm	3	M8X25H
9	Washer, Large - 8mm	1	8MMWASHERL
10	Flanged Nut	1	8MMNUT
11	2-1/2" Exhaust Spring	12	RACE-SPS
12	3-1/2" Exhaust Spring	2	RACE-SPL
**	Muffler Clamp Heat Insulator	1	HT SHLDTRS
**	Spring Puller Tool	1	ST-200
**	TRS Insert Kit	1	TRS-INS-BK
**	Yoshimura Vinyl Sticker	1	17029
**	Duplex Sticker	2	DLABEL

Nuts and Bolts Guide (Actual Size):

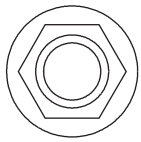

8mm Flange Nut

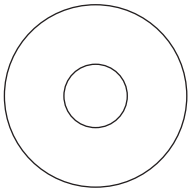

8mm Large Flat Washer

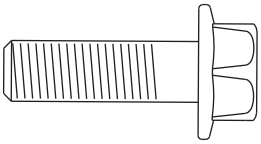

8mm x 25mm
Flange Hex Bolt