YOSHIMURA
RESEARCH&DEVELOPMENT OF AMERICA, INC.
5420 DANIELS STREET STE A, CHINO CA., 91710 · (800) 634-9166 · (909) 628-4722 · FAX (909) 591-2198
www.yoshimura-rd.com

RACE SERIES

Qualified Manufacturer Declared "Modified Part"

2005~2010
Suzuki GS500

1150262 (CF/SS)
1150265 (SS/SS)

TRS Stainless Steel Slip-On

FOR CLOSED COURSE COMPETITION ONLY; NOT INTENDED FOR STREET USE

Race Series systems are:
- NOT CARB/EPA tail-pipe emissions compliant.
- NOT street legal.
- For "Closed Course Competition" use only.

You must know how to remove and replace your stock exhaust in order to install this product otherwise have it installed by a professional mechanic. Keep all stock parts from your existing system as some components may be necessary to install your new Yoshimura exhaust depending on the application. Read through all instructions before beginning installation. Exhaust system can be extremely hot. Let motorcycle cool down before beginning installation. Always wear hand and eye protection and take precautionary measures to avoid injury.

NOTE: IN THE STATE OF CALIFORNIA, IT IS ILLEGAL TO MODIFY THE EMISSION CONTROL SYSTEM, WHICH INCLUDES THE CARBURETORS OF ANY VEHICLE.

Caution: Exhaust system can be extremely hot. Let motorcycle cool down before beginning installation.

Note: Read through all instructions before beginning installation.

Tools Needed:

Metric Socket Set, 3/8" Ratchet, and Extension
Metric Combination Wrench Set
Torque wrench
Hack Saw or Cutting Tool
Safety Glasses

Installation Steps:

1 Put safety glasses on. Cut stock exhaust system 70mm from the weld shown in Fig. 1 and Fig. 2. Remove stock muffler. Smooth out any sharp edges or protuberances on the cut pipe. Make sure the part of the stock header that the Yoshimura tailpipe will be sliding over is smooth. Grind smooth any weld bumps if necessary.

NOTE: High temp RTV silicone can be used to prevent exhaust leaks (not supplied).

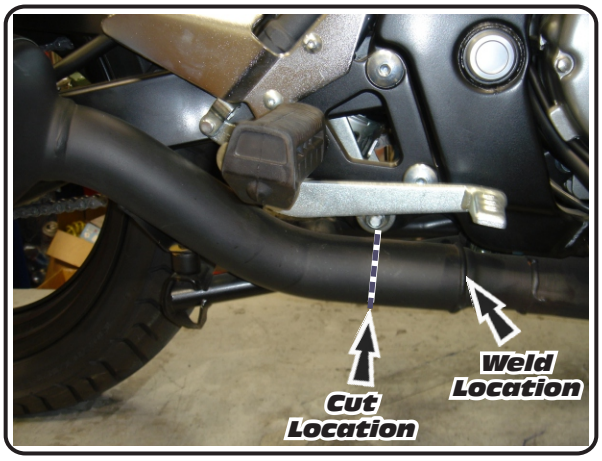

Fig. 1

2 Bolt Yoshimura muffler to tailpipe using the three supplied bolts and supplied exhaust gasket. Torque the supplied bolts to 2.3 kg-m (16.5 lb-ft). Transfer rubber centerstand stopper from stock exhaust to Yoshimura tailpipe.

3 Slide supplied collector clamp over the inlet of the Yoshimura slip-on tailpipe. Install slip-on exhaust system over the cut portion of stock exhaust system. Ensure tailpipe is fully seated onto stock pipe. Do not tighten clamp yet.

4 Install heat insulator to inside of muffler clamp and slide clamp onto muffler.

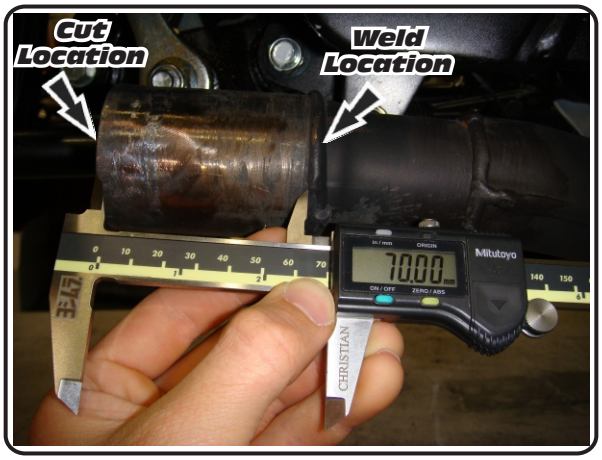

Fig. 2

5 Mount muffler clamp to the outside of stock muffler mount bracket using stock bolt, washer, and nut (see Fig. 3). Torque bolt to 2.5 kg-m (18 lb-ft).

6 Torque collector clamp to 1.1 kg-m (8.0 lb-ft).

7 It is recommended that the entire exhaust system be wiped down with rubbing alcohol to remove oil and fingerprints. This will help prevent tarnishing of the finish after the exhaust is heated up.

8 Check for proper clearance between new exhaust system and motorcycle (i.e. swing-arm, etc.). If any problem is found, please carefully follow through the installation steps again. If problem still persists, please call Yoshimura technical department at (800)634-9166 / in CA (909)628-4722.

Note: After starting motorcycle, it is normal for new exhaust system and muffler to smoke until oil residue burns off.

Fig. 3

#115026(2,5,7)

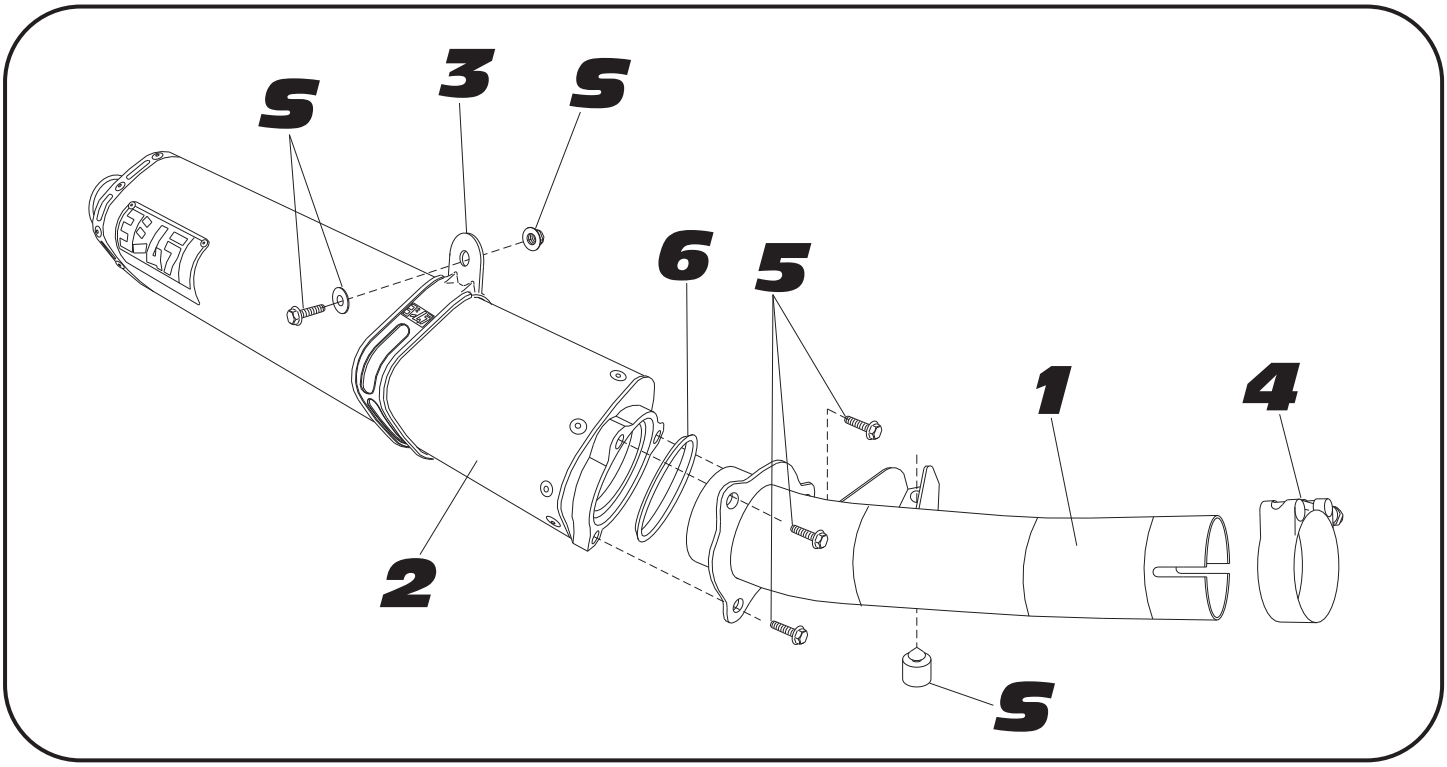

Parts Diagram

NO.	DESCRIPTION	QTY	PART #
1	Yoshimura Stainless Steel Slip-On Tailpipe	1	1150-435
2	TRS Tri-Oval Muffler Assembly with Carbon Fiber Sleeve with Stainless Steel Sleeve with Titanium Sleeve	1	 1150262-RMA 1150265-RMA 1150267-RMA
3	Muffler Clamp Stainless Steel or Titanium Sleeve uses Carbon Fiber Sleeve uses	1	 CTS816X CTS816
4	Stainless Steel Exhaust Collector Clamp	1	20063
5	8mm x 12mm Bolt	3	M8X12H
6	Exhaust Gasket for Bolt-On Connection	1	14181-33E00
**	Muffler Clamp Heat Insulator	1	HT SHLDTRS
**	Yoshimura Vinyl Sticker	1	17029