YOSHIMURA
RESEARCH&DEVELOPMENT OF AMERICA, INC.
5420 DANIELS STREET STE A, CHINO CA., 91710 · (800) 634-9166 · (909) 628-4722 · FAX (909) 591-2198
www.yoshimura-rd.com

Signature Series

Qualified Manufacturer Declared "Replacement Part"

2006~2020

Yamaha R6

13620E7220 (CF/CF)
13620E7550 (SS/CF)

TRC Stainless Steel Slip-On

Signature Series systems are:
- CARB/EPA tail-pipe emissions compliant.
- Marked with appropriate EPA noise labels.
- Independent laboratory tested for EPA new vehicle noise compliance.

You must know how to remove and replace your stock exhaust in order to install this product otherwise have it installed by a professional mechanic. Keep all stock parts from your existing system as some components may be necessary to install your new Yoshimura exhaust depending on the application. Read through all instructions before beginning installation. Exhaust system can be extremely hot. Let motorcycle cool down before beginning installation. Always wear hand and eye protection and take precautionary measures to avoid injury.

NOTE: IN THE STATE OF CALIFORNIA, IT IS ILLEGAL TO MODIFY THE EMISSION CONTROL SYSTEM, WHICH INCLUDES THE CARBURETORS OF ANY VEHICLE.

Caution: Exhaust system can be extremely hot. Let motorcycle cool down before beginning installation.

Note: Read through all instructions before beginning installation.

Tools Needed:

11 and 12mm socket
3/8" ratchet and extension
10mm wrench
4mm, 5mm, and 6mm allen wrench
Torque wrench

Installation Steps:

1 Remove right side fairing.

2 Remove black cover that hides the exhaust valve (see Fig. 1).

3 Disconnect and remove the exhaust valve cables (see Fig. 2 and refer to your service manual for complete removal instructions).

NOTE: Do not unplug servo motor. Unplugging the servo motor may cause the bike to run in a power limited fail safe mode.

4 Remove stock muffler by removing stock muffler mount bolt and loosening stock exhaust clamp (see Fig. 2).

Note: For 2010 models, removal of tailpipe ring and gasket may be necessary.

5 Slide supplied collector clamp over inlet of Yoshimura TRC muffler and install TRC muffler using the stock bolt and washer (see Parts Diagram on page 3).

6 Torque muffler mount bolt to 2.3 kgf-m (16.5 lb-ft).

7 Torque supplied collector clamp to 1.1 kgf-m (8 lb-ft).

8 Reinstall right side fairing.

9 It is recommended that the muffler be wiped down with rubbing alcohol to remove oil and fingerprints. This will help prevent tarnishing of the finish after the exhaust is heated up.

10 Check for proper clearance between new exhaust system and motorcycle. (i.e. Swing-arm, body work, etc.) If any problem is found, please carefully follow through the installation steps again. If problem still persists, please call Yoshimura technical department at (800)634-9166 / in CA (909)628-4722.

Note: After starting motorcycle, it is normal for new exhaust system to smoke until oil residue burns off.

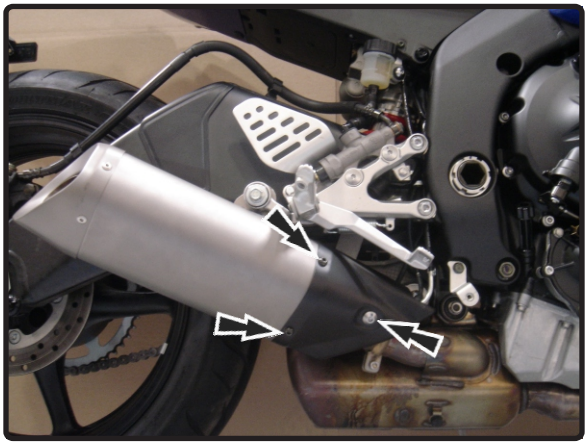

Fig. 1

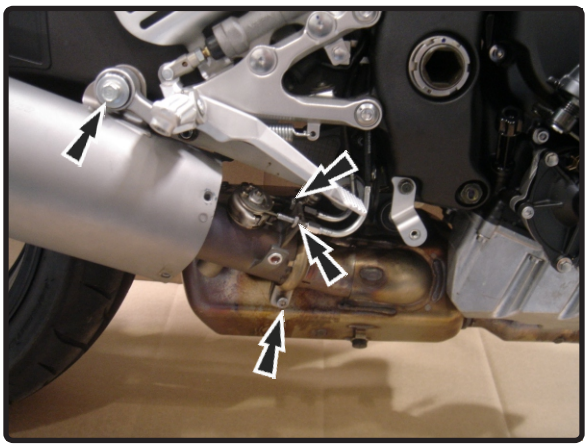

Fig. 2

#13620E7(220,550)

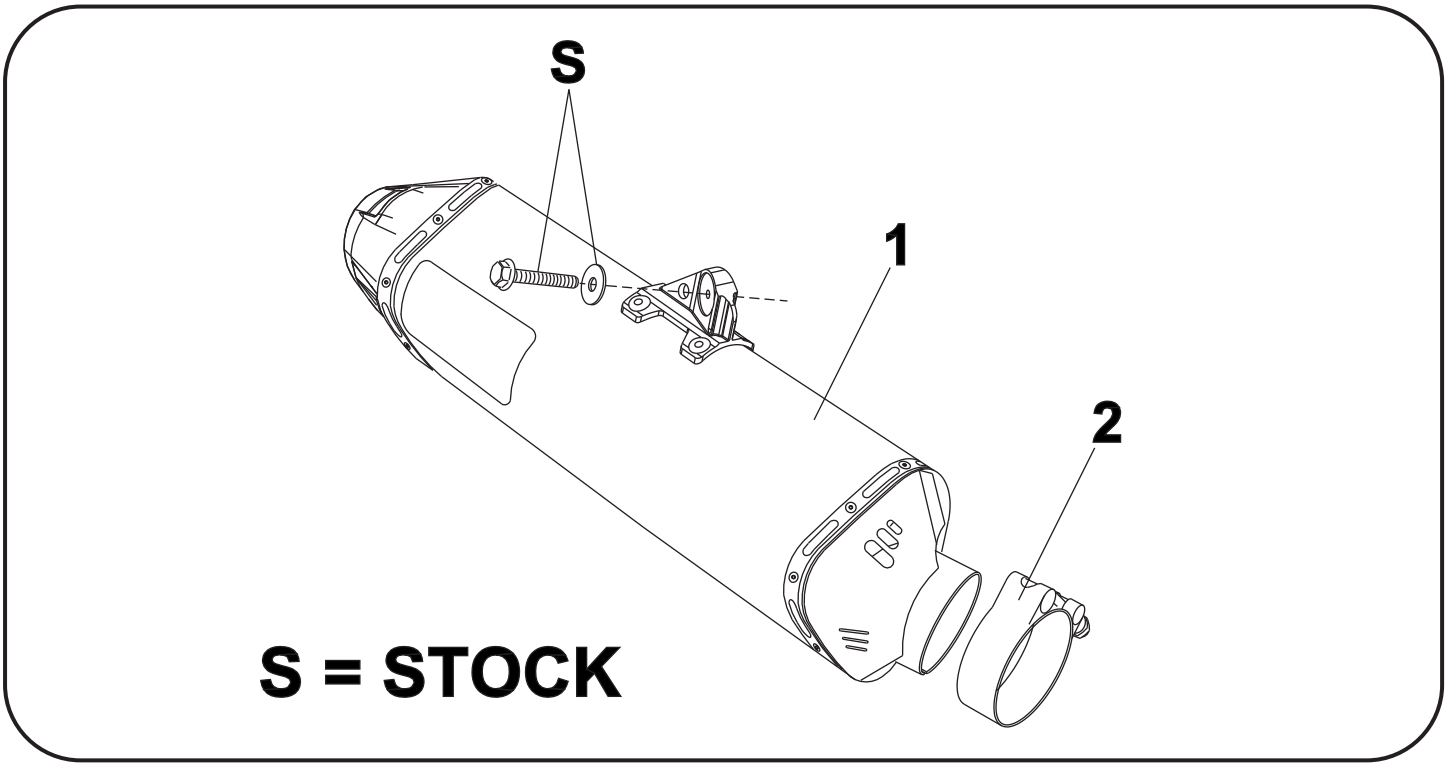

Parts Diagram

NO.	DESCRIPTION	QTY	PART #
1	Yoshimura Slip-On Muffler with Carbon Fiber Sleeve with Stainless Steel Sleeve	1	N/A
2	Exhaust Collector Clamp	1	22059
**	Yoshimura Vinyl Sticker	1	17100

NOISE EMISSION WARRANTY

Yoshimura warrants that this exhaust system, at time of sale, meets all applicable U.S. E.P.A. Federal noise standards. This warranty extends to the first person who buys this exhaust system for purposes other than resale, and to all subsequent buyers. Warranty claims should be directed to Yoshimura R&D of America, Inc.
5420 Daniels St. Chino, CA 91710 | Tel (800) 634-9166

TAMPERING PROHIBITION

Federal law prohibits any modification to this exhaust system which causes the motorcycle to exceed the Federal noise standard. Use of the motorcycle with such a modified exhaust system is also prohibited.

Acts likely to constitute tampering include removal or puncturing the muffler, baffles, header pipes, or any other component which conducts exhaust gases.

WARNING: This product should be checked for repair or replacement if the motorcycle noise has increased significantly through use. Otherwise, the owner may become subject to penalties under state and local ordinances.

YOSHIMURA®
RESEARCH AND DEVELOPMENT OF AMERICA, INC.

Dear Yoshimura Customer,

Congratulations and thank you for purchasing a Yoshimura Exhaust System. Over six decades of experience in research and development, state of the art machinery, materials and craftsmanship of the highest quality all come together in a product of exceptional quality and performance—in other words, this is the best thing you can put on your bike.

We strive to provide you with a product perfect in fit and finish. However, if you have any problems, please give us a call. We have found that most fitment issues can be easily resolved by a conversation with one of our knowledgeable and friendly staff. If the issue cannot be resolved this way, our warranty evaluation program may be the answer. Please take a moment to review our recommendations for the care of your exhaust and our warranty information.

PLEASE NOTE: If you have any doubts about your exhaust: **DO NOT START THE MOTORCYCLE! ONCE AN EXHAUST HAS BEEN USED OR MODIFIED, IT CANNOT BE RETURNED FOR CREDIT OR EXCHANGE.**

EXHAUST SYSTEM MAINTENANCE

Yoshimura Exhaust Systems require very little care and maintenance; here are a few tips:

1. Use mild car/motorcycle soap to clean the exhaust system—do not use any abrasives or degreasers.
2. Clean your exhaust with metal/stainless polish every 1-2 months to retain the luster and remove dirt and grime. (DO NOT USE POLISH ON "WORKS FINISH" SYSTEMS)
3. Avoid contaminating exhaust surfaces when hot.
4. 4.Your exhaust system will change color (blue, magenta, purple, and/or gold) due to heat; this is normal.
5. Keep all clamps, bolts and other fasteners tight as exhaust systems are susceptible to vibration damage.
6. If you ride in coastal regions or areas that use salt to control ice and snow, wipe the exhaust down after it cools to remove any possible salt residue, which can result in rusting.
7. If you are storing your motorcycle for the season, wipe the exhaust system down with rubbing alcohol before storage.
8. Head pipes glowing (visible in normal light) may indicate an excessively lean condition that must be corrected.

CARBON FIBER:

Carbon fiber equipped exhaust components require special attention. The following addresses wear issues directly related to carbon fiber:

1. Keep all clamps, bolts and other fasteners tight. Carbon Fiber is very susceptible to vibration damage.
2. Keep all chemicals and solvents away from the carbon fiber, as they will damage the finish.
3. High temperatures will cause the resin in the carbon fiber to break down. Visual signs such as an amber hue in the resin may be early signs of heat damage to carbon fiber.
4. Upon seeing amber colored resin, discontinue use. The exhaust system needs to be inspected by a representative from Yoshimura, for repack, and/or repair. Continued use will cause component failure.

STAINLESS STEEL:

Stainless Steel is not rust proof but is less prone to rusting, staining and pitting; but it is prone to oxidation like all metals.

WORKS FINISH:

1. Works Finish exhaust systems should never be cleaned with abrasives or polishes.
2. Yoshimura recommends using "Bar Keepers Friend" cleaner to remove minor stains.
3. Surface reconditioning services are available to remove scratches and undesirable discoloration due to extreme heat. Contact Yoshimura Tech Department at (800) 634-9166 / in CA (909) 628-4722 for more information.

RE-PACKING TIPS

To maintain maximum sound and engine performance the muffler packing will need to be replaced at some time during the muffler's life. Yoshimura recommends repacking your muffler at least once a year.
Failure to maintain the muffler packing may cause damage to the muffler and/or void the warranty. Regularly inspect the muffler body for discoloration, cracks, rattling, or other signs of wear caused by depleted muffler packing. If muffler packing is determined to be depleted or worn, a Yoshimura muffler re-pack kit is highly recommended to restore the muffler to optimum maximum performance.
Yoshimura offers a 3-5 day turn around (plus transit time) to inspect and refurbish used and damaged mufflers.
For more information on muffler repacking please visit our website at: https://www.yoshimura-rd.com/pages/repack-and-insert-chart

*****PRO TIP***** Before you install your new muffler for the first-time log the weight in your Owner's or Service manual along with the current hours or mileage on your vehicle. When you are performing periodic maintenance on your vehicle (like a tire change, or an oil change) you can remove your Yoshimura muffler from the vehicle and weigh it again. Over time, the packing material inside your muffler will burn off with use, and the muffler will need to be repacked. When the weight loses approximately 100 grams of the original weight, you should consider getting your Yoshimura muffler repacked. You can order repacking kit or the parts to repack the muffler from the Yoshimura website, or your local dealer. You can also contact the Yoshimura sales office and arrange to send in your muffler for the repacking service too.

IMPORTANT TECHNICAL NOTE

Yoshimura recommends on all race exhaust systems, that all spring joints be safety wired. Recommended wire type 304/316 stainless steel with a .032" diameter should be used.

YOSHIMURA EXHAUST LIMITED WARRANTY

All Yoshimura R&D of America, Inc., exhaust systems carry a one-year limited warranty against defects in workmanship and/or materials.

WHO IS COVERED?

This warranty is provided to the original purchaser of the exhaust system.

WHAT VOIDS THE WARRANTY?

1. Abuse, misuse, improper installation and/or modifications
2. Custom applications
3. No proof of purchase at the time of warranty. Claimant must provide proof of purchase (original receipt or invoice) and a warranty authorization number (RMA) obtained from Yoshimura.
4. Finishes such as plating or painted surfaces with discoloration or rust due to inclement weather conditions, exposure to salt, exposure to chemicals, or lack of maintenance by the customer are not covered.
5. International grey-market product purchased through a dealer/distributor not authorized for your country will not be supported by this warranty.

EXTENT OF WARRANTY:

Any defective exhaust system properly returned to Yoshimura will be repaired or replaced by Yoshimura. Yoshimura is not responsible for any other expense incurred by the customer under the terms of this limited warranty, nor is Yoshimura responsible for any damages either consequential, incidental, special, contingent or otherwise; or expenses or injury arising directly or indirectly from the use of the exhaust system. Any exhaust system returned to Yoshimura must be sent at the customers expense along with the proof of purchase and warranty authorization (RMA). Yoshimura reserves the right to determine whether the terms of the warranty, set out above, have been properly followed. In the event that the terms are not followed this warranty is void. Yoshimura is the sole determiner of abuse, misuse,

installation errors and modifications—should any of these be found, this warranty is void. The duration of any and all implied warranties are limited to the duration of the express warranty. All incidental or consequential damages are hereby excluded. The warranty gives you specific legal rights and you may have other rights, which vary from state to state. Some states do not allow the exclusion or limitation of incidental or consequential damages or limitations on how long an implied warranty lasts, so the above limitations and exclusions may not apply to you.

If you have a fitment or other problem, or are missing a part, please double-check this trouble shooting guide first:

1. Reference your instruction sheet and double-check all drawings and instructions
2. Make sure muffler clamps are installed correctly (refer to instructions diagram). On many models, there is a right and wrong way to install. Also verify part numbers on headers and tail pipe.
3. Always make sure to install spring-mounted manifolds and flanges on cylinder head prior to installing headers.
4. Always take time to examine problems in detail.
5. When all else fails, call our technical support line at (909) 628-4722. The technical line is open 9:00am – 4:30pm Monday through Friday, Pacific Time. Please have the following information handy: Year/Make/Model of motorcycle, date of purchase, place of purchase, batch dates and part numbers (found on header and tail-pipe components).
6. Also, feel free to ask through online e-mail at sales@yoshimura-rd.com, or fax your question/problems to (909) 591-2198.

To obtain technical information directly from Yoshimura, call (909) 628-4722.