YOSHIMURA
RESEARCH&DEVELOPMENT OF AMERICA, INC.
5420 DANIELS STREET STE A, CHINO CA 91710 · (800)634-9166 · (909)628-4722 · FACSIMILE (909)591-2198
WWW.YOSHIMURA-RD.COM

OFF-ROAD PERFORMANCE EXHAUST SYSTEM

2010-2014
Suzuki
RMZ-250

218301E220	*RS-4D TITANIUM FULL-SYSTEM WITH CARBON FIBER SLEEVE*
218301E720	*RS-4D TITANIUM FULL-SYSTEM WITH TITANIUM SLEEVE*

THIS PRODUCT IS DESIGNED FOR USE IN CLOSED COURSE RACING AND IS NOT INTENDED FOR ANY OTHER USE.

CAUTION: The muffler packing on this system MUST be replaced every 6-8 hours of use, or after each moto. Failure to follow recommended muffler re-packing interval can cause muffler damage and may void the warranty.

NOTE: IN THE STATE OF CALIFORNIA, IT IS ILLEGAL TO MODIFY THE EMISSION CONTROL SYSTEM INCLUDING THE CARBURETORS OR FUEL INJECTION OF ANY HIGHWAY VEHICLE.

Caution: Exhaust system may be extremely hot. Let motorcycle cool down before beginning installation.

Note: Read through all instructions before beginning installation.

Tools Needed:

Metric Socket Set
Ratchet Wrench and Extension
Torque Wrench
Spring Puller Tool
Hex Key Set

Installation Steps:

1 Stock Exhaust Removal

a. Remove right rear number plate (see Fig. 1 for fastener locations).

b. Loosen stock muffler clamp.

c. Unbolt chassis and muffler mount bolts.

d. Remove stock muffler (see Fig. 2 for fastener locations).

e. Remove stock header (see Fig 3 for fastener locations).
Note: Inspect stock header gasket for damage. If damaged, replace with new stock gasket.

2 Install Yoshimura Exhaust

a. Install header springs onto Yoshimura flange and manifold. Mount loosely onto cylinder head using stock header bolts.

b. Install Yoshimura header onto Yoshimura manifold.

b. Temporarily remove tailpipe-to-muffler spring.

c. Install supplied rubber grommet into aluminum muffler mounting bracket. Install aluminum insert into rubber grommet (make sure shoulder of aluminum insert faces toward the frame, see Fig. 4).

d. Install Yoshimura tailpipe and muffler onto Yoshimura header.

e. Mount stock chassis mount bolt to tailpipe. Leave loose

f. Mount muffler with stock muffler mount bolt and washer. Leave loose.

g. Attach header springs to header and tailpipe-to-muffler spring.

h. Check exhaust for proper position and clearance and adjust if necessary.

I. Tighten stock header nuts to 15 ft-lb (21 N-m).

j. Tighten chassis mount and muffler mount bolts to 15 ft-lb (21 N-m).

Fig. 1

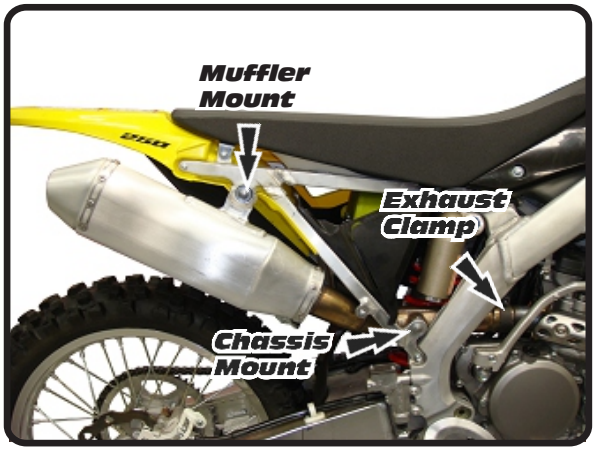

Fig. 2

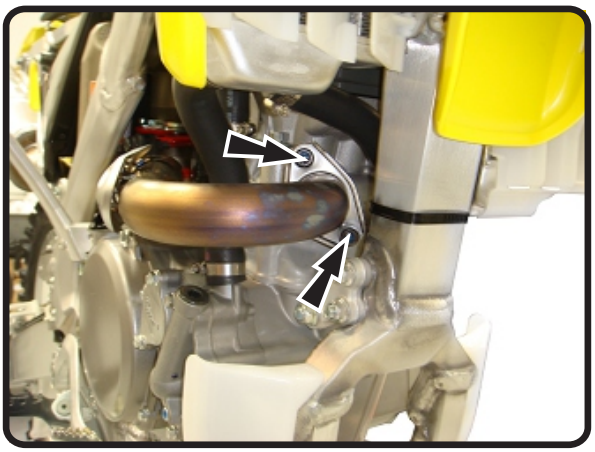

Fig. 3

3 Reinstall

a. Reinstall number plate.

b. It is recommended that the muffler and tailpipe be wiped down with rubbing alcohol to remove oil and fingerprints. This will help prevent tarnishing of the finish after the exhaust is heated up.

Before starting motorcycle, check for proper clearance between new exhaust system and rear suspension (i.e. tire, swingarm, brake, rear shock, etc). If any problem is found, please carefully follow through the installation steps again. If problem still persists, please call Yoshimura tech department at (800) 634-9166 / in CA (909) 628-4722.

NOTE: After starting motorcycle, it is normal for new exhaust system and muffler to emit smoke until oil residue burns off.

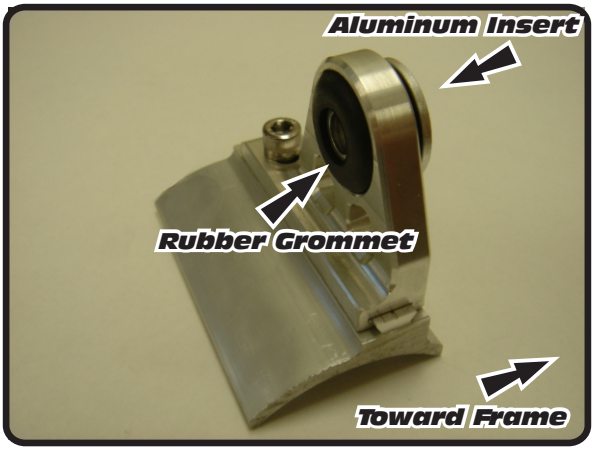

Fig. 4

PN: 218301E(220,720)

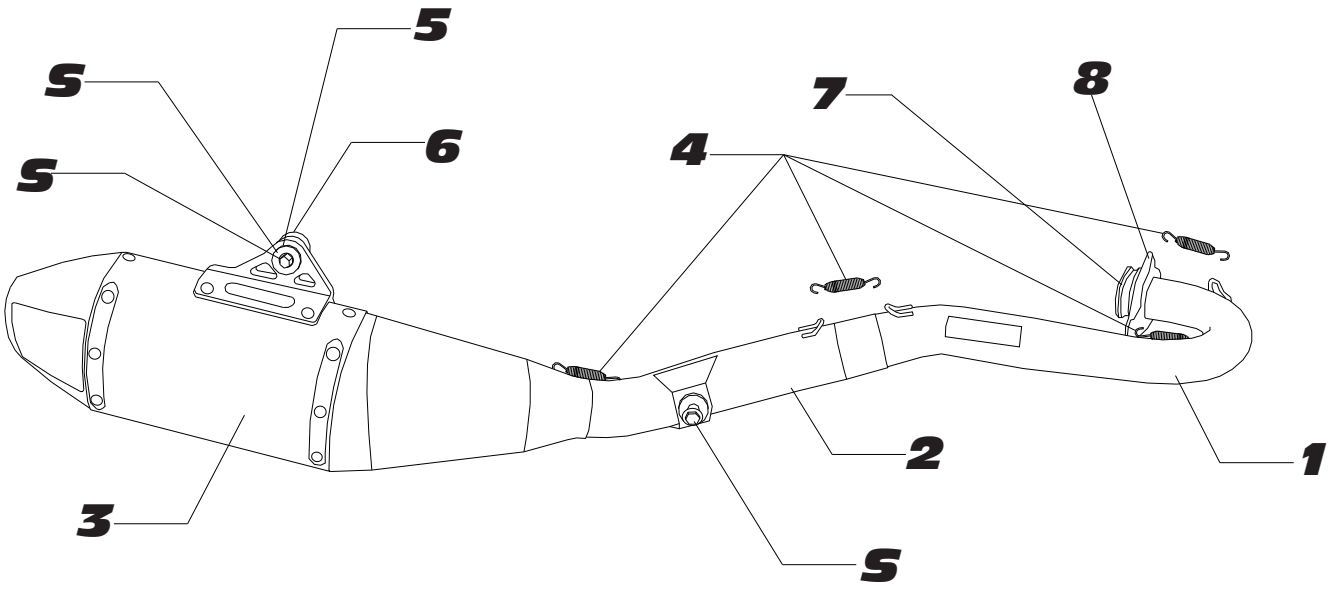

S = STOCK

Parts Diagram

NO.	DESCRIPTION	QTY	PART #
1	Yoshimura Titanium Header	1	2183-704
2	Yoshimura Titanium Tailpipe	1	2183-744
3	Yoshimura Race Muffler with Carbon Fiber Sleeve Yoshimura Race Muffler with Titanium Sleeve	1	218301E220-RMA 218301E720-RMA
4	Short Exhaust Spring	4	RACE-SPX-1
5	Muffler Mount Rubber Grommet	1	Z1022
6	Aluminum Insert	1	ALS-010
7	Yoshimura Manifold	1	2183SDM-TI
8	Yoshimura Flange	1	2183-SDR
**	Spring Puller Tool	1	ST-200
**	Yoshimura Vinyl Sticker	1	17029
OPTIONAL REPLACEMENT PARTS			
RS4D Top Sound Insert			INS-TB-K
RS4D Bottom Sound Insert			INS-BB-K
Re-pack Kit			REPACK-RS4-PK24

YOSHIMURA
RESEARCH&DEVELOPMENT OF AMERICA, INC.
5420 DANIELS STREET SUITE A, CHINO, CA 91710 · (800)634-9166 · (909)628-4722 · FACSIMILE (909)591-2198
www.yoshimura-rd.com

INS-TB-K | YOSHIMURA RS4D LOW VOLUME INSERT KIT

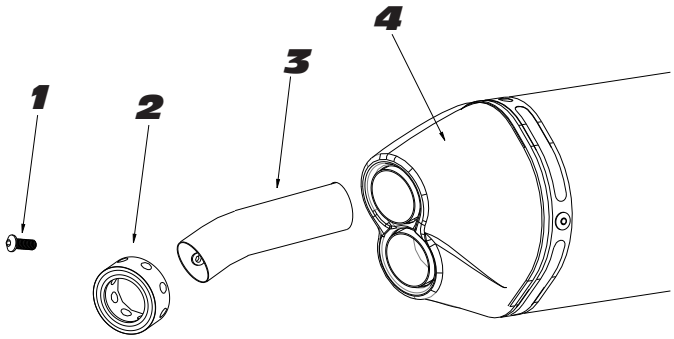

Parts Diagram

NO.	DESCRIPTION	QTY	PART #
1	5mm x 12mm Screw	1	M5x12
2	RS4D Top Ring 1.00"	1	RS4D-RING-1000
3	RS4D Top Low Volume Insert	1	INS-TB
4	Yoshimura Exhaust	**	**

1 *Remove muffler from tailpipe.*

2 *Insert the front insert into the tailpipe.*

3 *Reinstall the muffler.*

4 *Insert the rear insert into the end of the muffler and secure using the small allen head bolt.*

NOTE: It is recommended that a low strength "Loc-tite" is used on the small allen head bolt.

YOSHIMURA
RESEARCH&DEVELOPMENT OF AMERICA, INC.
5420 DANIELS STREET SUITE A, CHINO, CA 91710 · (800)634-9166 · (909)628-4722 · FACSIMILE (909)591-2198
www.yoshimura-rd.com

INS-BB-K | YOSHIMURA RS4D LOW VOLUME INSERT KIT

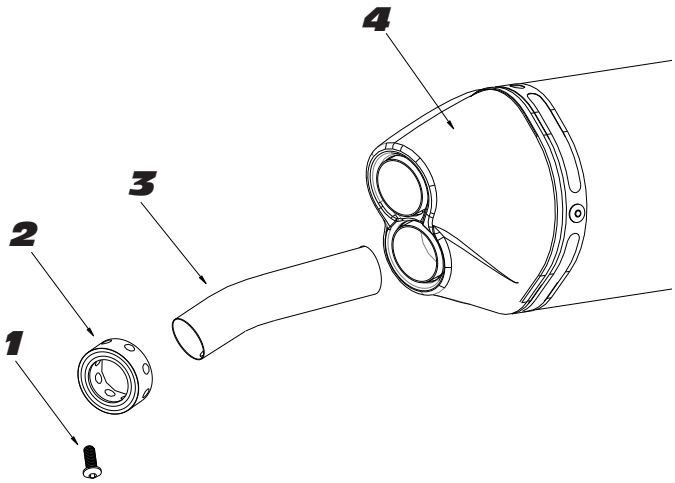

Parts Diagram

NO.	DESCRIPTION	QTY	PART #
1	5mm x 8mm Screw	1	M5x8
2	RS4D Bottom Ring 1.25"	1	RS4D-RING-1250
3	RS4D Bottom Low Volume Insert	1	INS-BB
4	Yoshimura Exhaust	**	**

1 *Remove muffler from tailpipe.*

2 *Insert the front insert into the tailpipe.*

3 *Reinstall the muffler.*

4 *Insert the rear insert into the end of the muffler and secure using the small allen head bolt.*

NOTE: It is recommended that a low strength "Loc-tite" is used on the small allen head bolt.