YOSHIMURA
RESEARCH&DEVELOPMENT OF AMERICA, INC.
5420 DANIELS STREET STE A, CHINO CA 91710 · (800) 634-9166 · (909) 628-4722 · FAX (909) 591-2198
WWW.YOSHIMURA-RD.COM

Signature Series

Qualified Manufacturer Declared "Replacement Part"

2006~2016
Honda TRX90

2290500 (SS/AL)
TRS Stainless Steel Full-System

Signature Series systems are:
- CARB/EPA tail-pipe emissions compliant.
- Marked with appropriate EPA noise labels.
- Independent laboratory tested for EPA new vehicle noise compliance.

CAUTION: The muffler packing on this system MUST be replaced every 6-8 hours of use, or every 1-2 motos. Failure to follow recommended muffler re-packing interval can cause muffler damage and may void the warranty.

NOTE: IN THE STATE OF CALIFORNIA, IT IS ILLEGAL TO MODIFY THE EMISSION CONTROL SYSTEM, WHICH INCLUDES THE FUEL INJECTION OF ANY VEHICLE.

Caution: Exhaust system can be extremely hot. Let motorcycle cool down before beginning installation.

Note: Read through all instructions before beginning installation.

Tools Needed:

8mm, 10mm, and 12mm sockets Ratchet and Extension Torque Wrench

Installation Steps:

1 Remove seat, battery, and rear plastics by removing the fasteners shown in Fig. 1, 2, 3, 4, and 5.

2 Remove stock exhaust system and exhaust port gasket by removing the bolts shown in Fig. 6, 7, and 8.

3 Install new stock exhaust port gasket (not included).

4 Install Yoshimura header and muffler using stock header nuts and supplied muffler mount bolt.

6 Torque header nuts to 2.0 kg-m (14.6 lb-ft).

7 Torque muffler bolt to 2.5 kg-m (18 lb-ft).

8 Install Yoshimura heat shield to header with supplied bolts.

9 It is recommended that the muffler and tailpipe be wiped down with rubbing alcohol to remove oil and fingerprints. This will help prevent tarnishing of the finish after the exhaust is heated up.

10 Reinstall rear plastics, battery, and seat.

11 Check for proper clearance between new exhaust system and rear suspension (i.e. tire, swing-arm, brake, etc). If any problem is found, please carefully follow through the installation steps again. If problem still persists, please call Yoshimura tech department at (800)634-9166 / in CA (909) 628-4722.

NOTE: After starting motorcycle, it is normal for new exhaust system and muffler to emit smoke until oil residue burns off.

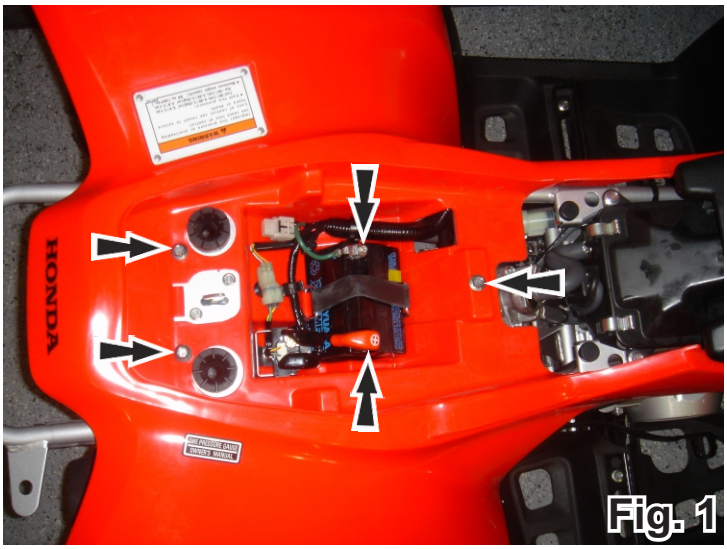

Fig. 1

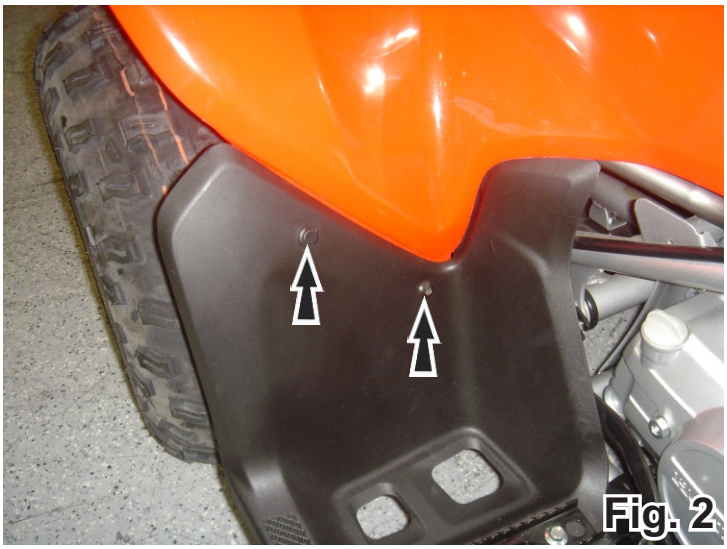
Fig. 2

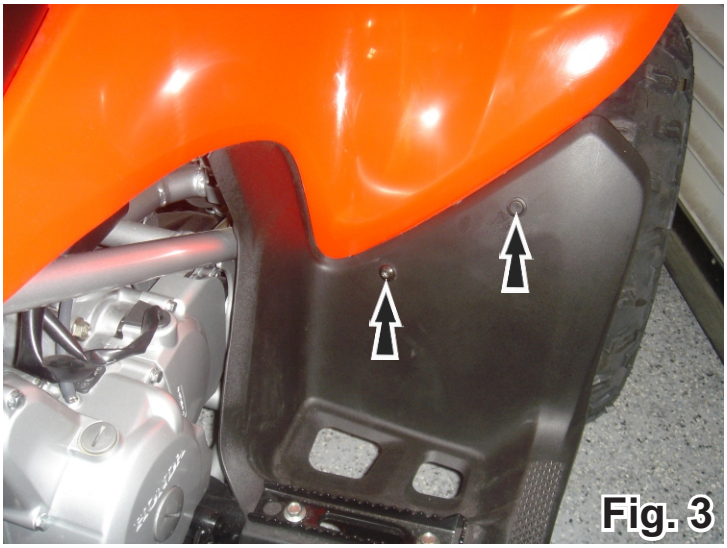
Fig. 3

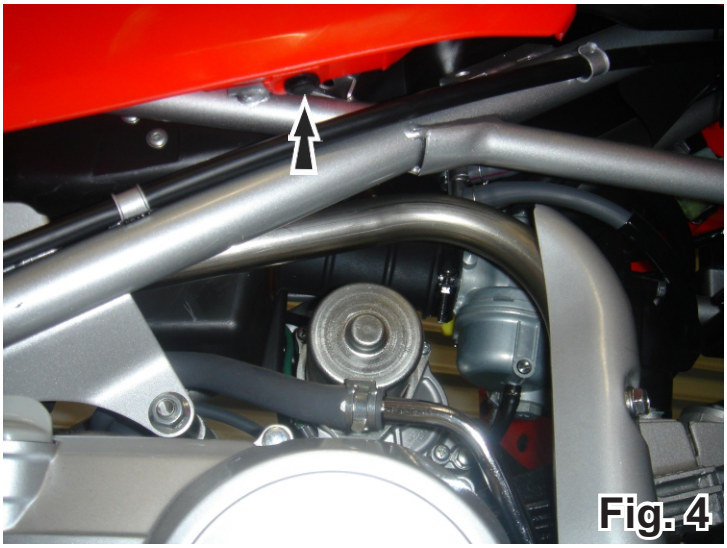
Fig. 4

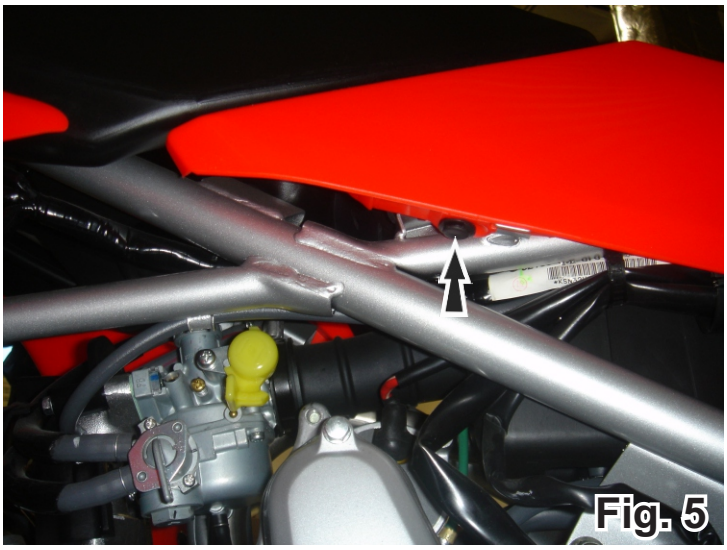
Fig. 5

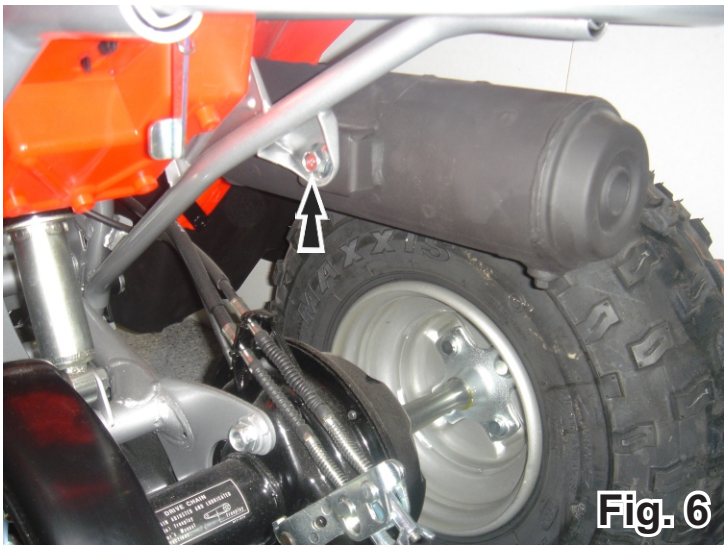
Fig. 6

Fig. 7

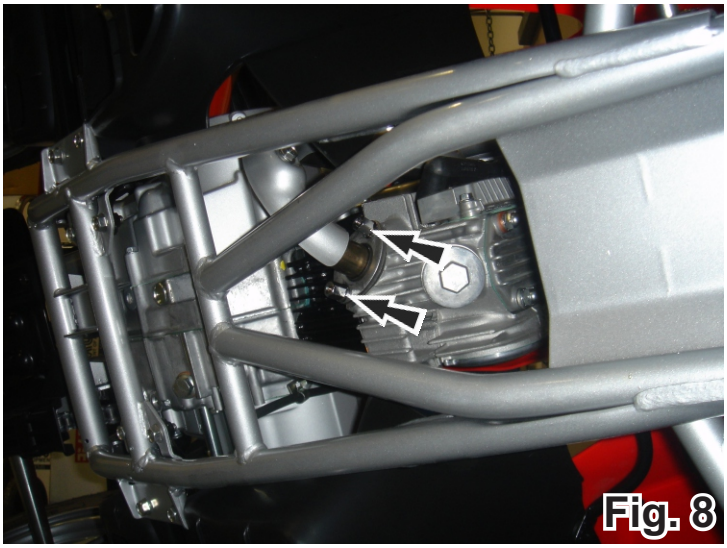
Fig. 8

#2290500

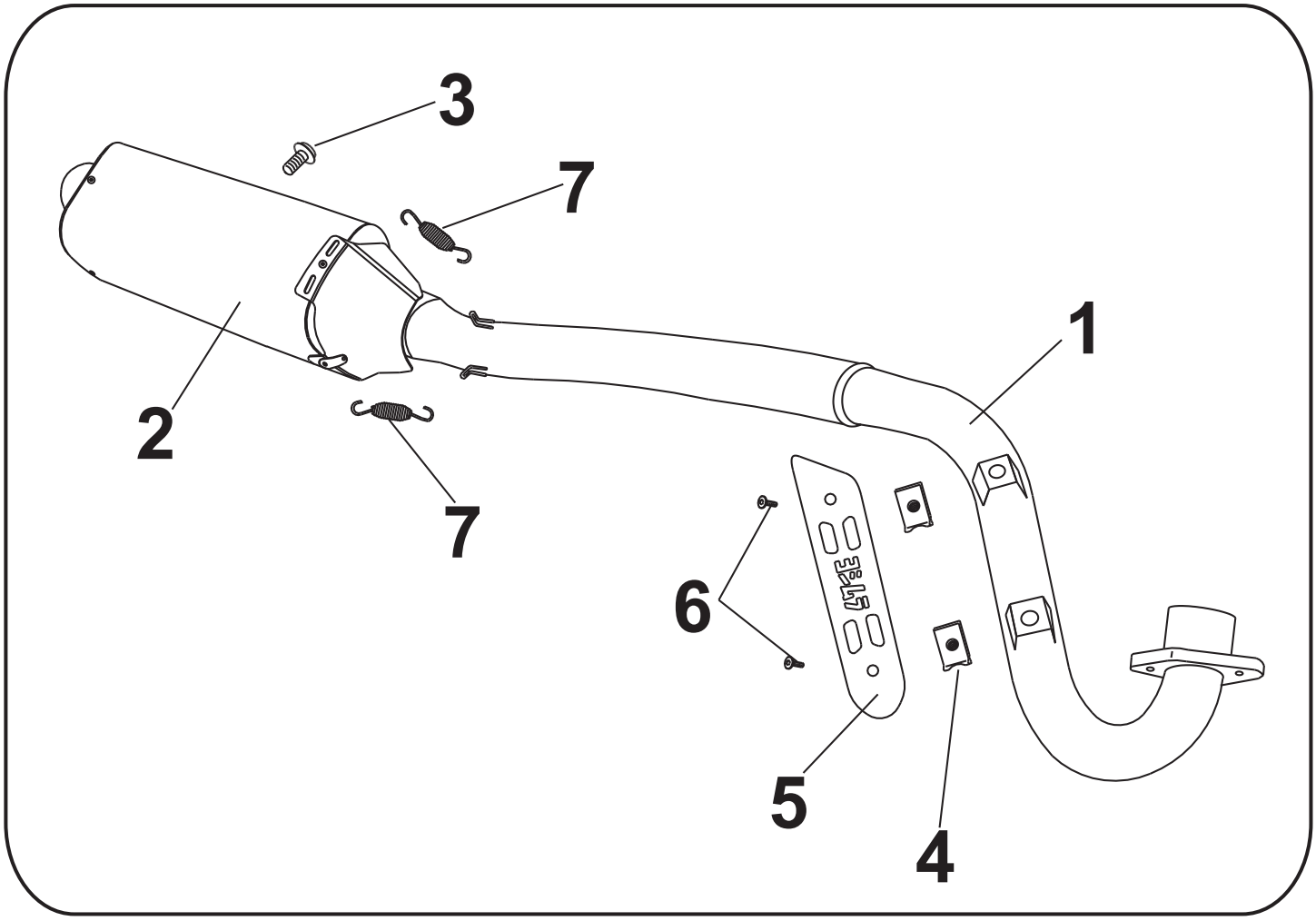

Parts Diagram

NO.	DESCRIPTION	QTY	PART #
1	Yoshimura Header & Tailpipe Stainless Steel Competition	1	2290-101
2	Yoshimura Muffler Assembly	1	2290500-RMA
3	8mm X 12mm Flange Bolt	1	M8X12H
4	Heatshield Mounting Clips	2	M6X1U
5	Yoshimura Heat Shield	1	2205-HS
6	Heatshield Mounting Bolts	2	M6X12BHS
7	Medium Springs	2	RACE-SPS-1
**	Spring Puller Tool	1	ST-200
**	Yoshimura Vinyl Sticker	2	17028-BLK

YOSHIMURA
RESEARCH&DEVELOPMENT OF AMERICA, INC.
4555 CARTER COURT, CHINO CALIF. 91710 · (800)634-9166 · (909)628-4722 · FACSIMILE (909)591-2198
www.yoshimura-rd.com

TEC-SA Spark Arrester Cleaning Information

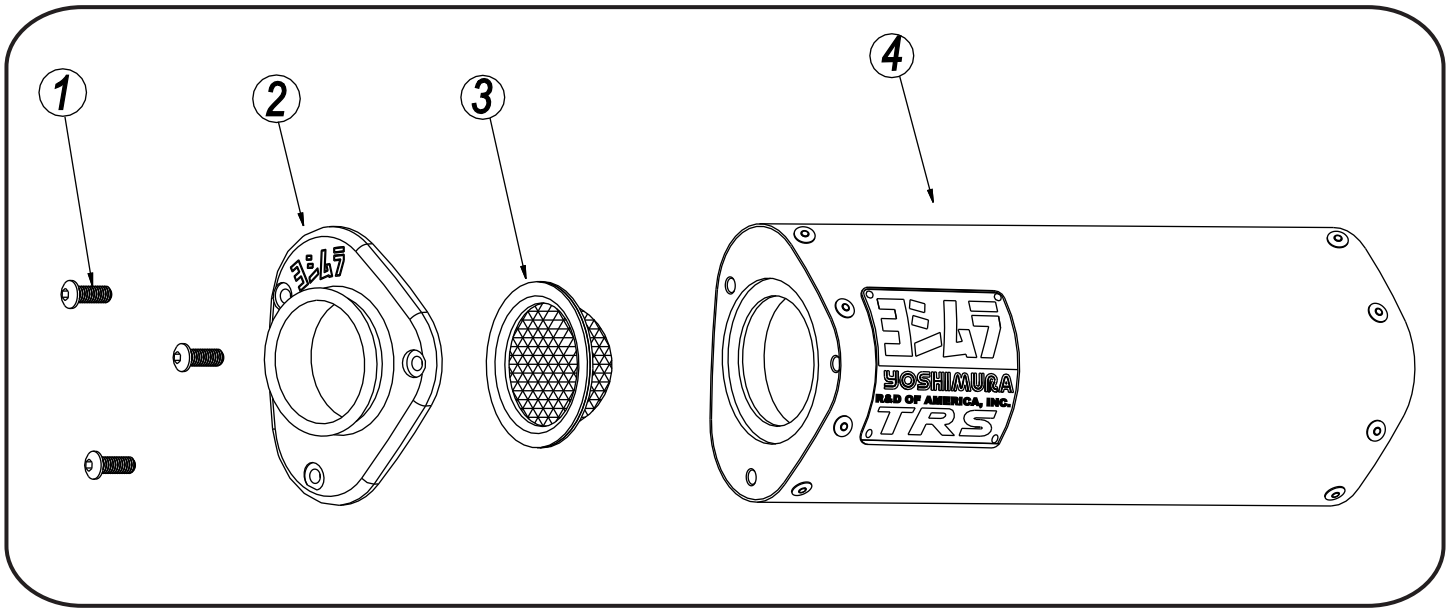

Parts Diagram

Caution: Muffler can be extremely hot. Let muffler cool down before removing spark arrester.

Note: Read through all instructions before beginning disassembly.

NO.	DESCRIPTION	QTY
1	6 x 1.0mm x 16mm Button Head Screw	3
2	Mini YRD TEC End Cap, Cover	1
3	TEC Spark Arrester Insert	1
4	Muffler Assembly	1

Tools Needed:

4mm Allen Key
Wire Brush
Pair of Gloves
Safety Glasses

Cleaning Steps:

1 *Using a 4mm Allen key remove the three 6mm x 16mm Button Head Screws located in the muffler end cap. (See Parts Diagram for location)*

2 *Remove the end cap, gasket and spark arrester from the muffler.*

3 *Using a wire brush remove carbon deposits from spark arrester screen. Once clean inspect the screen for excessive wear or damage, if any is found the spark arrester must be replace. Cleaning and inspection should be performed after every 60 hours of use.*
(Caution: Gloves and Safety Glasses should be worn while cleaning spark arrester.)

4 *Re-install spark arrester, gasket, end cap and 6mm x 16mm screws into muffler assembly. Torque screws to 1.0 kg-m (7.3 lb-ft)*
(Note: It is recommended that a low strength "Loc-tite" is used on the screws.)