YOSHIMURA
RESEARCH&DEVELOPMENT OF AMERICA, INC.
5420 DANIELS STREET STE A, CHINO CA. 91786 · (800)634-9166 · (909)628-4722 · FACSIMILE (909)591-2198
www.yoshimura-rd.com

TRS OFFROAD PERFORMANCE EXHAUST SYSTEM

Yamaha 2004 - 2009 YFZ450

2375152-SA	*TITANIUM PRO FULL SYSTEM WITH CARBON FIBER*
2375157-SA	*TITANIUM PRO FULL SYSTEM WITH TITANIUM*

NOTE: THIS SYSTEM IS DESIGNED FOR USE IN CLOSED COURSE COMPETITION AND IS NOT INTENDED FOR ANY OTHER USE.

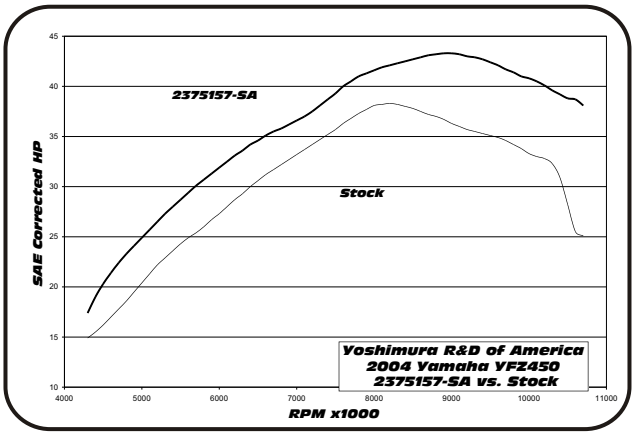

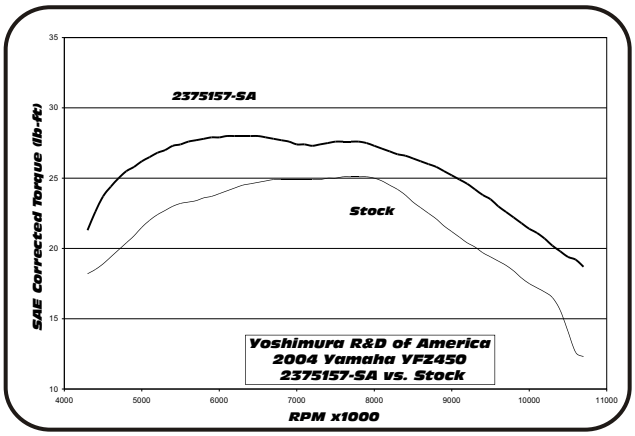

Note: Dyno graphs are for comparison use only. Actual results may vary depending on operating and motorcycle condition.

THIS PRODUCT IS DESIGNED FOR USE IN CLOSED COURSE RACING AND IS NOT INTENDED FOR ANY OTHER USE.

CAUTION: The muffler packing on this system MUST be replaced every 6-8 hours of use, or after each moto. Failure to follow recommended muffler re-packing interval can cause muffler damage and may void the warranty.

NOTE: IN THE STATE OF CALIFORNIA, IT IS ILLEGAL TO MODIFY THE EMISSION CONTROL SYSTEM. WHICH INCLUDES THE CARBURETORS OF ANY VEHICLE.

Caution: Exhaust system can be extremely hot. Let motorcycle cool down before beginning installation.

Note: Read through all instructions before beginning installation.

Tools Needed:

10mm, 11mm, 12mm Sockets
Ratchet Wrench and Extension
12mm Wrench
6mm Allen Wrench
Torque Wrench

Fig. 1

Installation Steps:

1 Loosen stock tailpipe collector clamp. Unbolt and remove stock muffler. (see Fig. 1 & 2)

2 Remove heat shield from stock header and install onto Yoshimura header using stock bolts.

3 Remove stock header and exhaust port gasket.

NOTE: When installing supplied manifold and flange do not use the stock exhaust port gasket. The manifold is designed to bolt directly to the exhaust port face.

4 Install supplied manifold and flange using stock nut and bolt.

5 Slide Yoshimura header onto stainless steel manifold. Ensure header is fully seated, hook supplied springs onto flange and header using supplied spring puller tool. (See Fig. 3)

6 Slip Yoshimura tailpipe with muffler onto header.

7 Apply heat insulator to inside of muffler clamp and slide clamp onto muffler. (Note direction of clamp in Fig. 4)

NOTE: Mufflers with carbon fiber sleeves must have supplied 4mm spacer installed between ears of the of the clamp. (See Fig. 4)

8 Mount clamps to upper stock chassis mounts using supplied bolts, washers and spacers. (See Fig. 4)

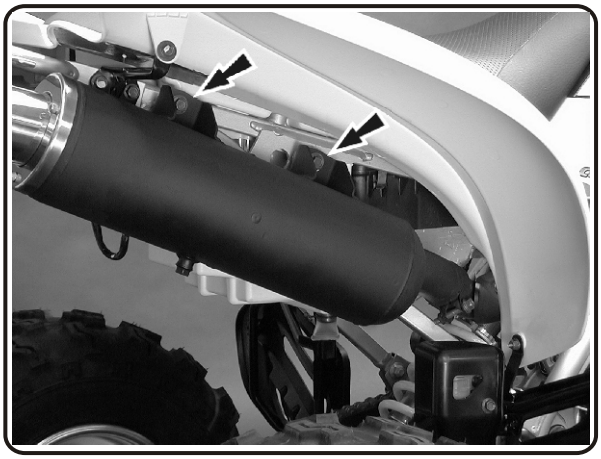

Fig. 2

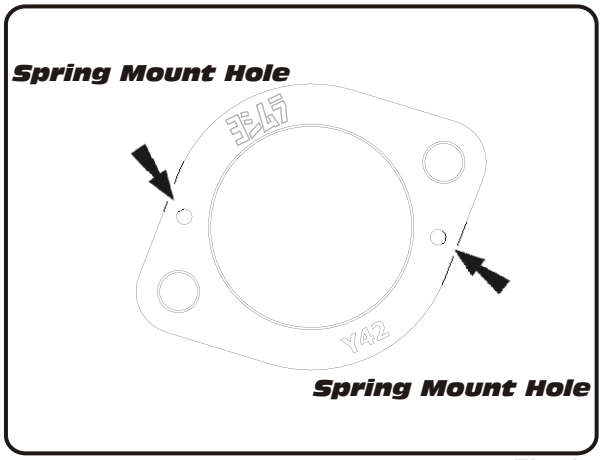

Fig. 3

9 Torque muffler clamp bolts to 2.5 kg-m (18 lb-ft)

10 Torque header mount bolts to 1.0 kg-m (7.3 lb-ft).

11 It is recommended that the entire exhaust system be wiped down with rubbing alcohol to remove oil and fingerprints. This will help prevent tarnishing of the finish after the exhaust is heated up.

12 Before starting motorcycle check for proper clearance between new exhaust system and motorcycle. (i.e. rear brake, frame, tire, etc.) If any problem is found, please carefully follow through the installation steps again. If problem still persists, please call Yoshimura tech. dept. At (800)634-9166 / in CA (909)628-4722

NOTE: After starting motorcycle, it is normal for new exhaust system and muffler to emit smoke until oil residue burns off.

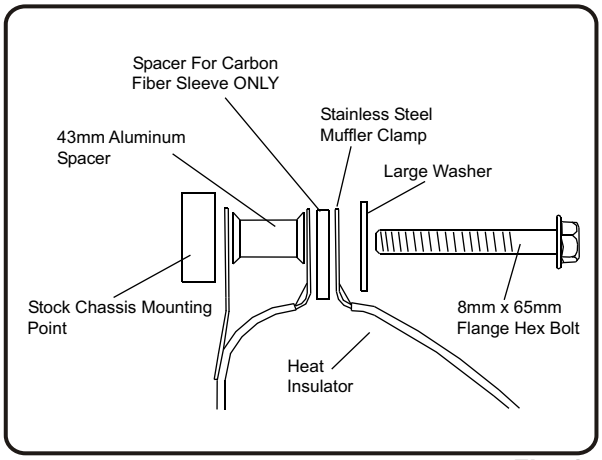

Fig. 4

#2375152-SA/2375157-SA

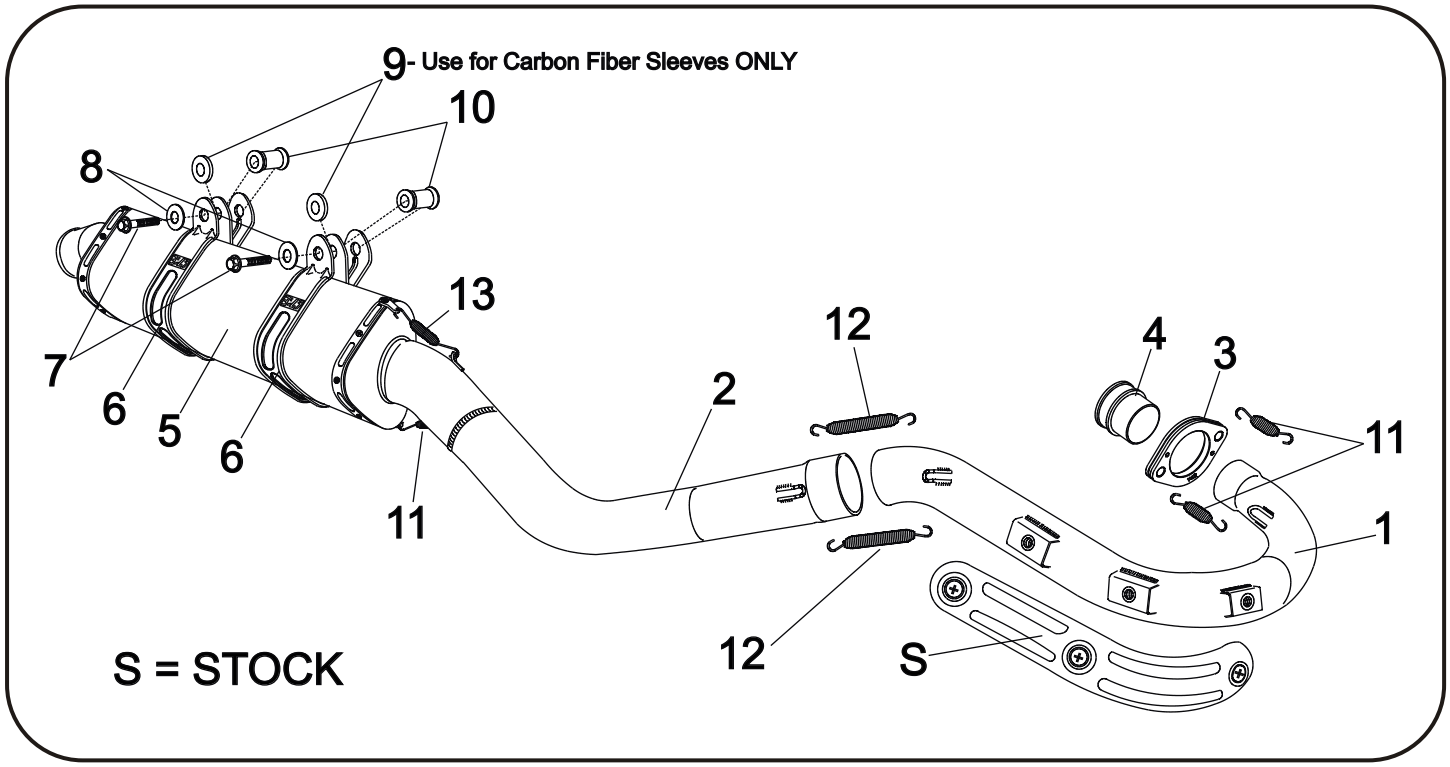

Parts Diagram

NO.	DESCRIPTION	QTY	PART #
1	Yoshimura Header Titanium Pro	1	2375-704-1
2	Yoshimura Tailpipe Titanium Pro	1	2375-744
3	Aluminum Flange	1	2385ADR
4	Stainless Steel Manifold	1	2375SDM
5	TRS Offroad Muffler Assembly	1	**
6	Stainless Steel Muffler Clamp	2	CTS087X
7	8mm x 65mm Flange Hex Bolt	2	M8X65H
8	Large Washer	2	8MMWASHERL
9	8mm X 4mm Spacer **(for Carbon Fiber Sleeve ONLY)**	2	8X4SPCR
10	8mm X 43mm Aluminum Spacer	2	8MMFS
11	Medium Exhaust Spring	3	RACE-SPS-1
12	Long Exhaust Spring	2	RACE-SPL-1
13	Short Exhaust Spring	1	RACE-SPX
**	Spring Puller Tool	1	ST-200
**	Muffler Clamp Heat Insulator	2	HT SHLD-14A
**	Yoshimura Vinyl Sticker	1	17029

Nuts and Bolts Guide (Actual Size):

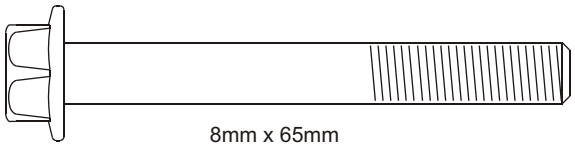

8mm x 65mm
Flange Hex Bolt

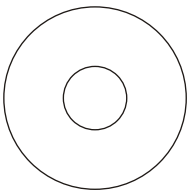

8mm Large Flat Washer

Jetting/Tuning Recommendations:

With Yoshimura full system and no sound inserts installed:

Remove air box lid
Fuel Mixture screw 2 3/4 turn out
Main jet #160
Needle clip to position 3

YOSHIMURA

RESEARCH&DEVELOPMENT OF AMERICA, INC.

www.yoshimura-rd.com

TEC-SA Spark Arrester Cleaning Information

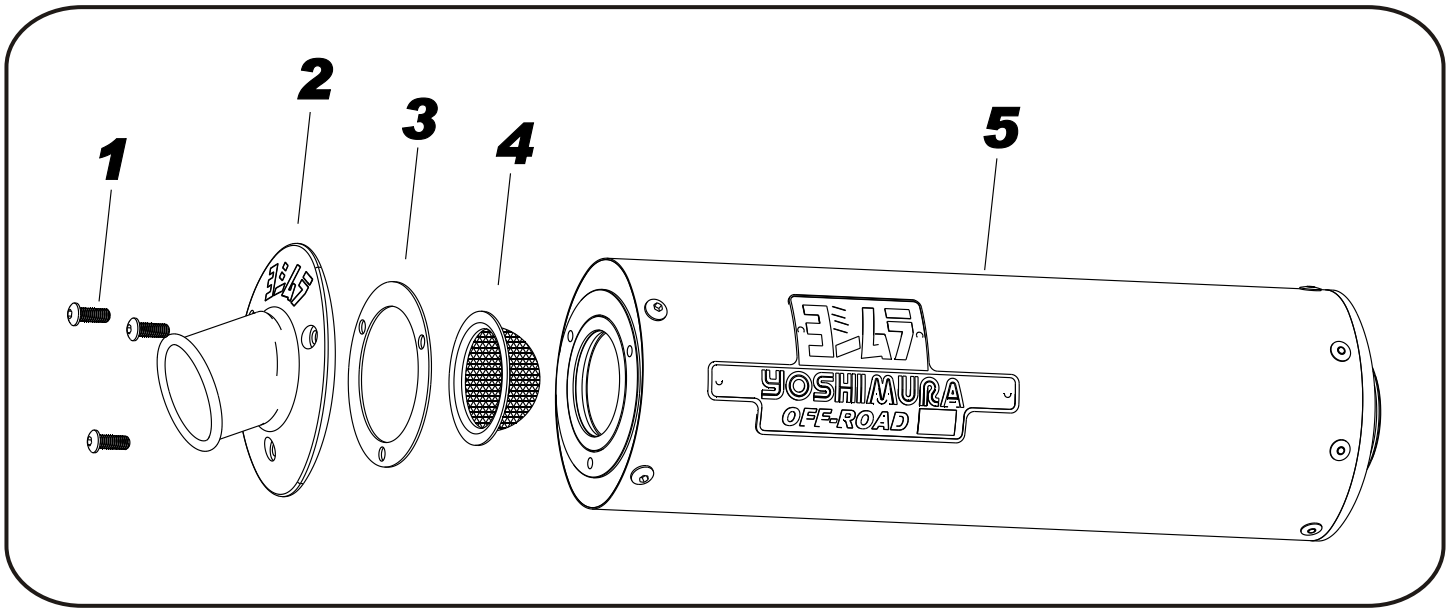

Parts Diagram

Caution: Muffler can be extremely hot. Let muffler cool down before removing spark arrester.

Note: Read through all instructions before beginning disassembly.

NO.	DESCRIPTION	QTY
1	6 x 1.0mm x 16mm Button Head Screw	3
2	4.0" YRD End Cap, Cover	1
3	T.E.C. End Cap, Gasket	1
4	T.E.C. End Cap, Spark Arrester	1
5	Muffler Assembly	1

Tools Needed:

4mm Allen Key
Wire Brush
Pair of Gloves
Safety Glasses

Cleaning Steps:

1 Using a 4mm Allen key remove the three 6mm x 16mm Button Head Screws located in the muffler end cap. (See Parts Diagram for location)

2 Remove the end cap, gasket and spark arrester from the muffler.

3 Using a wire brush remove carbon deposits from spark arrester screen. Once clean inspect the screen for excessive wear or damage, if any is found the spark arrester must be replace. Cleaning and inspection should be performed after every 60 hours of use.
(Caution: Gloves and Safety Glasses should be worn while cleaning spark arrester.)

4 Re-install spark arrester, gasket, end cap and 6mm x 16mm screws into muffler assembly. Torque screws to 1.0 kg-m (7.3 lb-ft)
(Note: It is recommended that a low strength "Loc-tite" is used on the screws.)