YOSHIMURA
RESEARCH&DEVELOPMENT OF AMERICA, INC.
5420 DANIELS STREET STE A, CHINO CA., 91786 · (800)634-9166 · (909)628-4722 · FACSIMILE (909)591-2198
www.yoshimura-rd.com

# TRC PERFORMANCE EXHAUST SYSTEM

## YAMAHA 03-05 YZ250F

| | |
|---|---|
| 2382702-SA | STAINLESS STEEL COMPETITION SLIP-ON SYSTEM WITH CARBON FIBER |

**THIS PRODUCT IS DESIGNED FOR USE IN CLOSED COURSE RACING AND IS NOT INTENDED FOR ANY OTHER USE.**

*CAUTION: The muffler packing on this system MUST be replaced every 6-8 hours of use, or after each moto. Failure to follow recommended muffler re-packing interval can cause muffler damage and may void the warranty.*

NOTE: IN THE STATE OF CALIFORNIA, IT IS ILLEGAL TO MODIFY THE EMISSION CONTROL SYSTEM. WHICH INCLUDES THE CARBURETORS OF ANY VEHICLE.

**Caution: Exhaust system can be extremely hot. Let motorcycle cool down before beginning installation.**

**Note: Read through all instructions before beginning installation.**

## Tools Needed:

10mm and 12mm sockets
11mm (7/16") deep socket
3/8" ratchet and extension
Torque wrench

## Installation Steps:

1 Remove right rear number plate. (See Fig. 1 for fastener locations) Remove stock muffler assembly.

2 Slip 1.75" exhaust clamp over Yoshimura tail-pipe and install tailpipe with muffler onto stock header. (See Fig.2) Note: No gasket is used between the header and tail-pipe)

3 Bolt tail-pipe to chassis mount using supplied bolt and spacer. (Leave loose, See Fig. 2)

4 Apply heat insulator to inside of muffler clamp and slide clamp onto muffler. (Note direction of clamp in Fig. 3)

5 Mount clamp to stock muffler mount using supplied spacer, bolt and washer. (See Fig.3)

6 Torque muffler and chassis mount bolt to 2.5 kg-m (18 lb-ft).

7 Torque exhaust clamp to 1.25 kg-m (9 lb-ft).

8 It is recommended that the muffler and tail-pipe be wiped down with rubbing alcohol to remove oil and fingerprints. This will help prevent tarnishing of the finish after the exhaust is heated up.

9 Reinstall number plate and check for proper clearance.

10 Check for proper clearance between new exhaust system and rear suspension (i.e. tire, swing-arm, brake, etc). If any problem is found, please carefully follow through the installation steps again. If problem still persists, please call Yoshimura tech. Dept. at (800)634-9166.

NOTE: After starting motorcycle, it is normal for new exhaust system and muffler to emit smoke until oil residue burns off.

Fig. 1

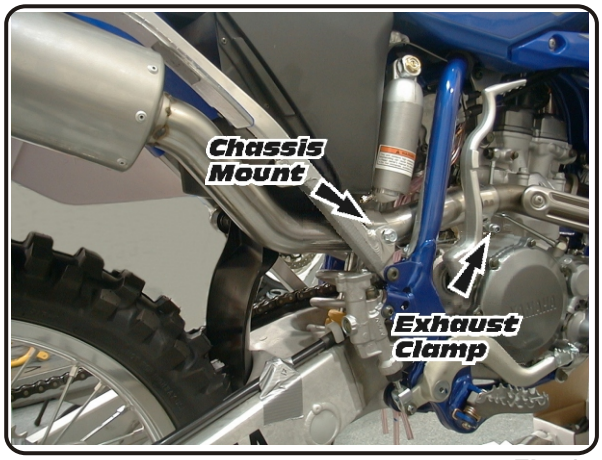


Fig. 2

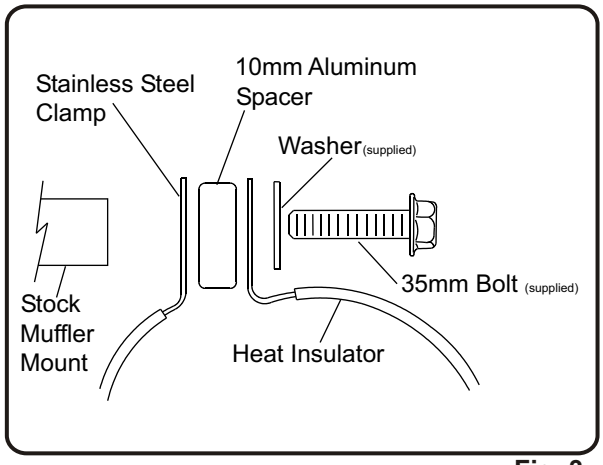


Fig. 3

# #2382702-SA

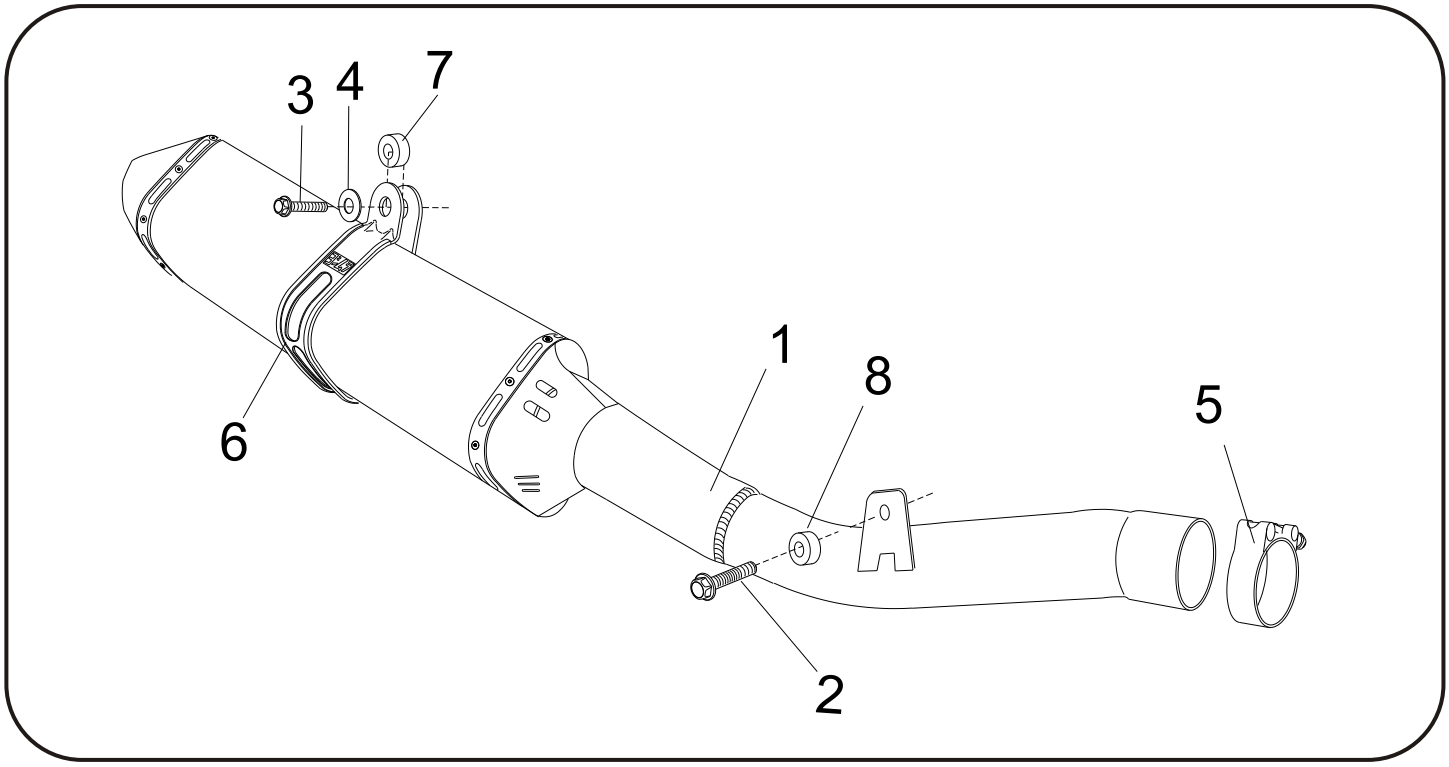


Parts Diagram

| NO. | DESCRIPTION | QTY | PART # |
|---|---|---|---|
| 1 | Yoshimura Tailpipe with Muffler | 1 | ** |
| 2 | 8mm X 25mm Flange Bolt | 1 | M8X25H |
| 3 | 8mm X 35mm Flange Bolt | 1 | M8X35H |
| 4 | 8mm Large Washer | 1 | 8MMWASHERL |
| 5 | Stainless Steel Collector Clamp | 1 | 22057 |
| 6 | Stainless Steel Muffler Clamp | 1 | CTS089 |
| 7 | 10mm Aluminum Spacer | 1 | 8X10SPC |
| 8 | 7mm Aluminum Spacer | 1 | 8X7SPC |
| ** | Muffler Clamp Heat Insulator | 1 | HT SHLD-14B |
| ** | Yoshimura Vinyl Sticker | 2 | 17028-BLK |

## Nuts and Bolts Guide (Actual Size):

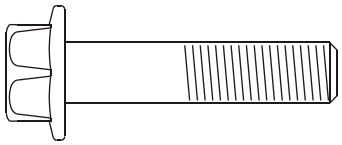

8mm x 35mm
Flange Hex Bolt

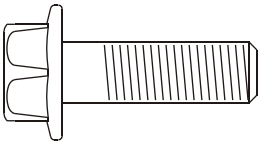

8mm x 25mm
Flange Hex Bolt

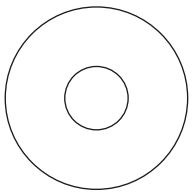

8mm Large Flat Washer

YOSHIMURA
RESEARCH&DEVELOPMENT OF AMERICA, INC.
4555 CARTER COURT, CHINO CALIF. 91710 · (800)634-9166 · (909)628-4722 · FACSIMILE (909)591-2198
www.yoshimura-rd.com

# TEC-SA Spark Arrester Cleaning Information

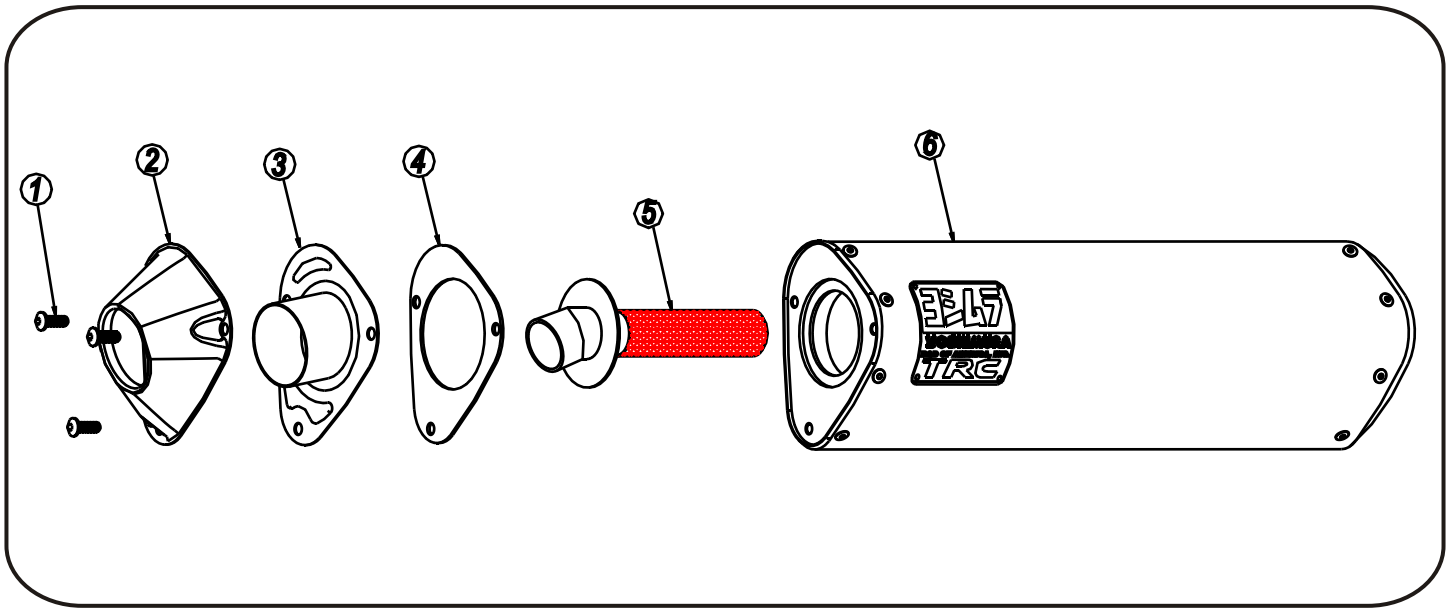


Parts Diagram

**Caution: Muffler can be extremely hot. Let muffler cool down before removing spark arrester.**

**Note: Read through all instructions before beginning disassembly.**

| NO. | DESCRIPTION | QTY |
|---|---|---|
| 1 | 6 x 1.0mm x 16mm Button Head Screw | 3 |
| 2 | TRC End Cap Cover | 1 |
| 3 | TRC End Cap Insert | 1 |
| 4 | T.E.C. End Cap, Gasket | 1 |
| 5 | T.E.C. Low Volume Spark Arrester | 1 |
| 6 | Muffler Assembly | 1 |

## Tools Needed:

*4mm Allen Key*
*Wire Brush*
*Pair of Gloves*
*Safety Glasses*

## Cleaning Steps:

1 *Using a 4mm Allen key remove the three 6mm x 16mm Button Head Screws located in the muffler end cap. (See Parts Diagram for location)*

2 *Remove the end cap, gasket and spark arrester from the muffler.*

3 *Using a wire brush remove carbon deposits from spark arrester screen. Once clean inspect the screen for excessive wear or damage, if any is found the spark arrester must be replace. Cleaning and inspection should be performed after every 60 hours of use.*
*(Caution: Gloves and Safety Glasses should be worn while cleaning spark arrester.)*

4 *Re-install spark arrester, gasket, end cap and 6mm x 16mm screws into muffler assembly. Torque screws to 1.0 kg-m (7.3 lb-ft)*
*(Note: It is recommended that a low strength "Loc-tite" is used on the screws.)*