YOSHIMURA
RESEARCH&DEVELOPMENT OF AMERICA, INC.
5420 DANIELS STREET STE A, CHINO CA 91710 · (800)634-9166 · (909)628-4722 · FACSIMILE (909)591-2198
WWW.YOSHIMURA-RD.COM

OFF-ROAD PERFORMANCE EXHAUST SYSTEM

YAMAHA
2006 - 2008
YZ250F
WR250F

2383172	*TITANIUM "PRO" FULL SYSTEM WITH CARBON FIBER SLEEVE*
2383177	*TITANIUM "PRO" FULL SYSTEM WITH TITANIUM SLEEVE*

THIS PRODUCT IS DESIGNED FOR USE IN CLOSED COURSE RACING AND IS NOT INTENDED FOR ANY OTHER USE.

CAUTION: The muffler packing on this system MUST be replaced every 6-8 hours of use, or after each moto. Failure to follow recommended muffler re-packing interval can cause muffler damage and may void the warranty.

NOTE: IN THE STATE OF CALIFORNIA, IT IS ILLEGAL TO MODIFY THE EMISSION CONTROL SYSTEM, WHICH INCLUDES THE CARBURETORS OF ANY VEHICLE.

Caution: Exhaust system can be extremely hot. Let motorcycle cool down before beginning installation.

Note: Read through all instructions before beginning installation.

Tools Needed:

8mm, 10mm, and 12mm Sockets
6mm Allen Socket
Ratchet Wrench and Extension
Torque Wrench
Spring Puller Tool

Fig. 1

Installation Steps:

1. Remove right rear number plate (see Fig. 1 for bolt locations).

2. Remove stock exhaust system (see Fig. 2 and Fig. 3 for nut and bolt locations).

3. Remove exhaust port gasket. Titanium system is designed to have the exhaust manifold bolted directly to the cylinder head without the use of the stock exhaust port gasket.

   NOTE: Install small exhaust springs onto aluminum flange prior to installing flange and manifold.

4. Install Yoshimura exhaust manifold and flange using stock header fasteners (see Fig. 4 for flange orientation).

5. Torque header fasteners to 1.0 kg-m (7.3 lb-ft).

6. Install Yoshimura header onto exhaust manifold using supplied small exhaust springs (use supplied spring puller tool). Ensure header is fully seated onto exhaust manifold.

7. Install supplied rubber grommet into aluminum muffler mounting bracket. Install aluminum insert into rubber grommet (note direction on insert, see Fig. 5).

8. Install Yoshimura tailpipe and muffler onto Yoshimura header.

9. Mount muffler to stock muffler mount location using supplied muffler mount bolt, washer, and muffler mount spacer. Install supplied chassis mount bolt.

10. Install Yoshimura heatshield using the stock heatshield bolts.

Fig. 2

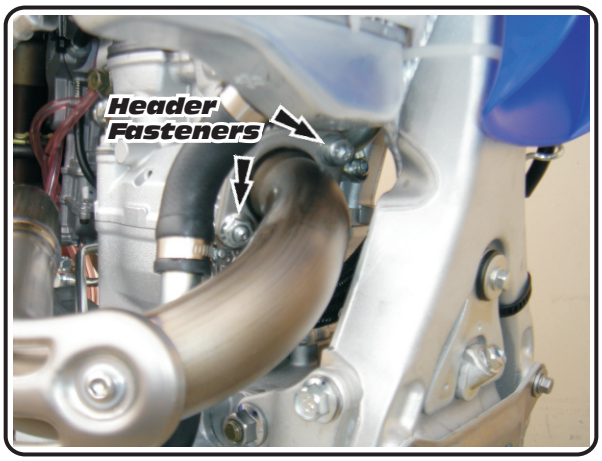

Fig. 3

11. *Install supplied medium exhaust springs from tailpipe to header spring hooks.*

12. *Check exhaust for proper position and clearance and adjust if necessary.*

13. *Torque muffler mount bolt to 2.5 kg-m (18 lb-ft).*

14. *Torque chassis mount bolt to 2.5 kg-m (18 lb-ft).*

15. *It is recommended that the muffler and tailpipe be wiped down with rubbing alcohol to remove oil and fingerprints. This will help prevent tarnishing of the finish after the exhaust is heated up.*

16. *Before starting motorcycle, check for proper clearance between new exhaust system and rear suspension (i.e. tire, swingarm, brake, rear shock, etc). If any problem is found, please carefully follow through the installation steps again. If problem still persists, please call Yoshimura tech department at (800) 634-9166 / in CA (909) 628-4722.*

17. *Reinstall number plate.*

    NOTE: After starting motorcycle, it is normal for new exhaust system and muffler to emit smoke until oil residue burns off.

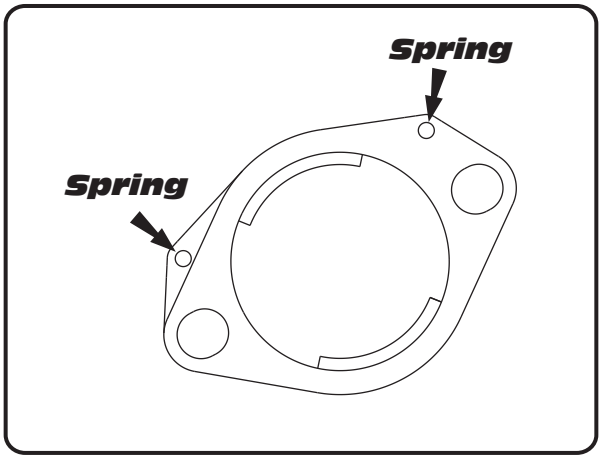

Fig. 4

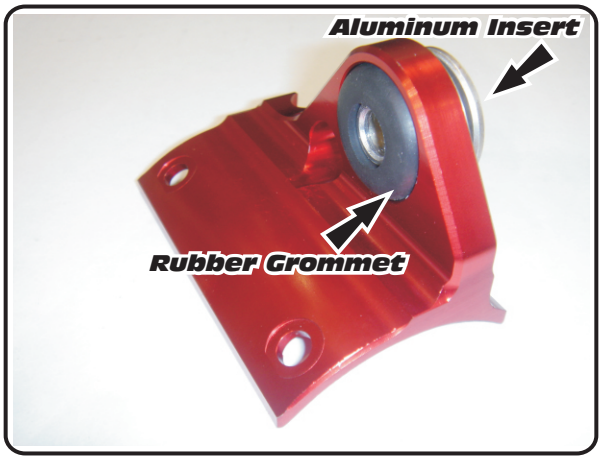

Fig. 5

#238317(2,7)

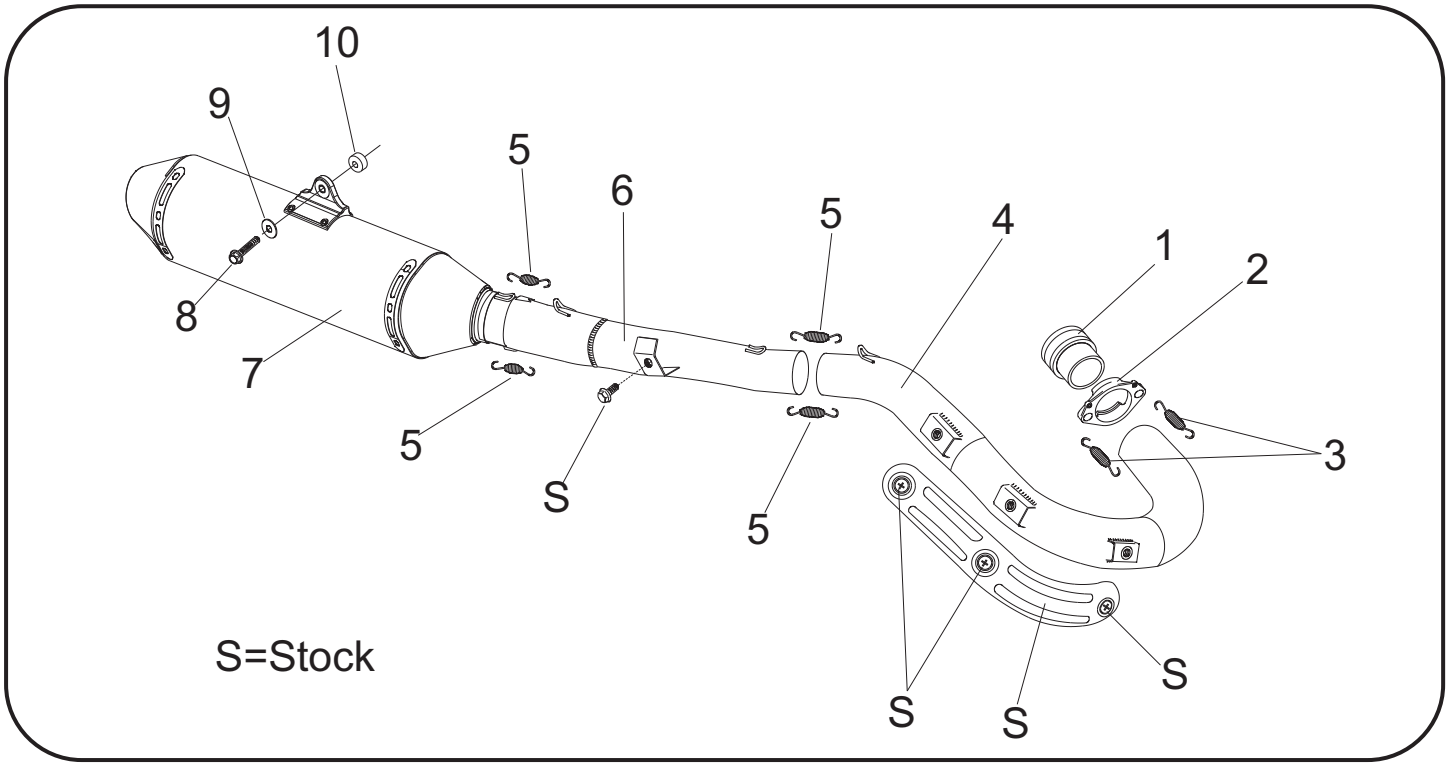

Parts Diagram

NO.	DESCRIPTION	QTY	PART #
1	Stainless Steel Exhaust Manifold	1	2380SDM-1
2	Exhaust Flange	1	YZ616SDR-01
3	Small Exhaust Spring	2	RACE-SPX-1
4	Yoshimura Titanium Header	1	2380-704
5	Medium Exhaust Spring	4	RACE-SPS-1
6	Yoshimura Titanium Tailpipe	1	2383-744
7	Yoshimura Muffler Muffler with Carbon Fiber Sleeve Muffler with Aluminum Sleeve	1	 2383162-RMA 2383167-RMA
8	8mm X 40mm Flange Bolt	1	M8X40H
9	Large Washer	1	8MMWASHERL
10	8mm X 10mm Aluminum Spacer	1	8X10SPC
**	Rubber Grommet for Muffler Mount	1	Z1022
**	Aluminum Insert for Rubber Grommet	1	ALS-003
**	Spring Puller Tool	1	ST-200
**	Yoshimura Vinyl Sticker	2	17028-BLK

Nuts and Bolts Guide (Actual Size):

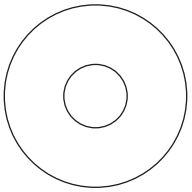

8mm Large Flat Washer

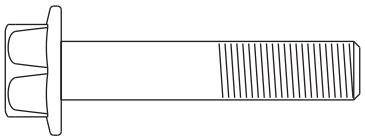

8mm x 40mm
Flange Hex Bolt