2330 W Broadway Rd #112, Mesa, Arizona 85202 · (800) 708-9803 · FACSIMILE (602) 391-2279
WWW.DRAGONFIRERACING.COM

OFF-ROAD PERFORMANCE EXHAUST SYSTEM

2008-2011 KAWASAKI TERYX 750 SIDE X SIDE

346000F550	*DUAL RS2 FULL SYSTEM WITH STAINLESS STEEL SLEEVE*

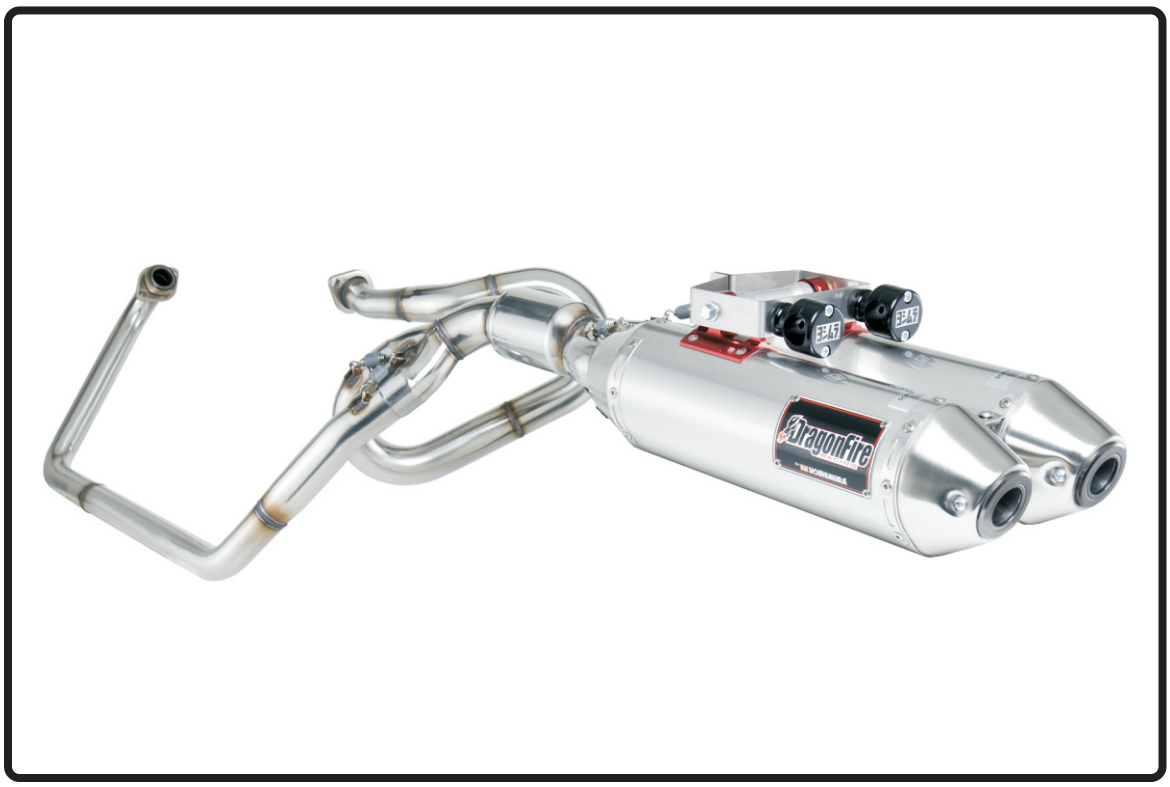

THIS PRODUCT IS DESIGNED FOR USE IN CLOSED COURSE RACING AND IS NOT INTENDED FOR ANY OTHER USE.

NOTE: IN THE STATE OF CALIFORNIA, IT IS ILLEGAL TO MODIFY THE EMISSION CONTROL SYSTEM, WHICH INCLUDES THE FUEL INJECTION OF ANY VEHICLE.

Caution: Exhaust system can be extremely hot. Let vehicle cool down before beginning installation. Always wear hand and eye protection and take precautionary measures to avoid injury.

Note: Read through all instructions before beginning installation.

Tools Needed:

Metric Socket Set
Ratchet and extension
Metric wrench Set
Torque wrench

Installation Steps:

Note: Removal of bed, center console and front plastic panels is not necessary for installation of DragonFire system, but may increase working area and visibility. If removal of bed is desired, use caution when removing and follow OEM service manual for procedures. Re-installation of bed requires bed stop bumpers to be replaced in order for the bed lifts to be re-installed.

1. Removing the stock system.

a) Remove driver side seat.

b) Remove belly pan from vehicle.

c) Loosen the two muffler clamps that connect the stock muffler to the tailpipe. (Fig. 1)

d) Remove pins and remove muffler from vehicle.

e) Remove rear header.

f) Remove front header.

g) Remove stock exhaust gaskets.

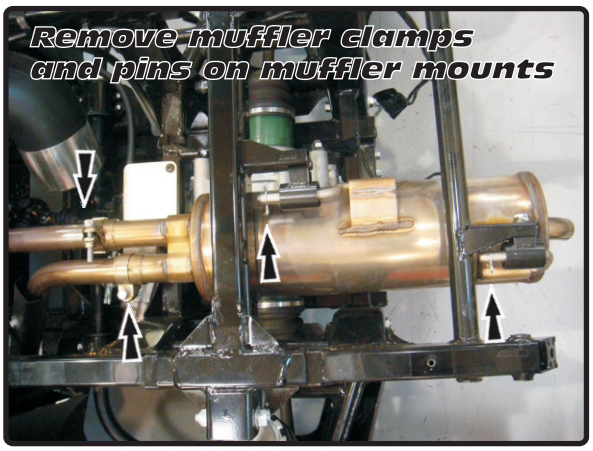

Fig 1

2. Installing the DragonFire system.

a) Install new stock exhaust gasket onto DragonFire manifold and install front header using stock nuts. Do not torque at this time.

b) Install new stock gasket onto rear DragonFire manifold and install header using stock nuts. Do not torque at this time.

c) Install Yoshimura muffler clamp brackets onto the frame rail using supplied hardware (Fig. 3). Do not torque at this time.

Fig 2

d) Insert supplied rubber grommets into holes on Yoshimura chassis bracket (See Parts Diagram).

e) Install DragonFire chassis bracket onto vehicle. Align the two rear holes (with rubber grommets inserted) with the two aluminum clamp brackets on the frame. Bolt chassis bracket to clamp brackets using supplied bolts. Do not torque at this time.

f) Bolt the front of the chassis mount bracket to stock chassis mount location using stock bolt. Torque to 14 lb-ft (1.9 kg-m).

g) Torque the bolts that hold chassis bracket to aluminum clamps to 10 lb-ft (1.4 kg-m).

h) Install tailpipe to front and rear header.

j) Insert supplied rubber grommets into DragonFire muffler brackets.

k) Insert DragonFire aluminum spacers into the rubber grommets.

l) Insert left muffler onto left tailpipe outlet and right muffler onto right tailpipe outlet. Bolt to chassis mount bracket using supplied bolt, washer and aluminum center spacer. Orientation should go as follows: Supplied bolt, Washer, Chassis mount bracket Muffler bracket (with rubber grommet installed), Aluminum spacer (inserted into rubber grommet), threaded aluminum center spacer.

n) Using supplied bolt, attach left and right mufflers together by bolting rivet band brackets together.

o) Torque header nuts on both headers to 12 lb-ft (1.6 kg-m).

p) Install exhaust springs on tailpipe to header connections.

q) Install exhaust springs on muffler to tailpipe connections.

r) Torque muffler mounting bolts to 14 lb-ft (1.9 kg-m).

s) Re-install belly pan.

Note: Re-install bed, center console, and plastic panels if removed in the beginning step.

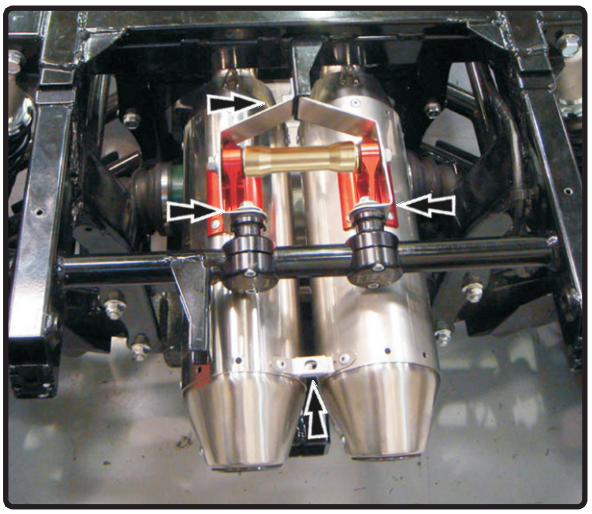

Fig 3

3. Fitment Check and Notes

a) Check for proper clearance between new exhaust system and rear suspension (i.e. tire, swing-arm, brake, rear shock etc). If any problem is found, please carefully follow through the installation steps again. If problem still persists, please call DragonFire Racing Tech Dept. at (800) 708-9803.

b) It is recommended that the muffler and tailpipe be wiped down with rubbing alcohol to remove oil and fingerprints. This will help prevent tarnishing of the finish after the exhaust is heated up.

c) NOTE: After starting the vehicle, it is normal for a new exhaust system and muffler to emit smoke until oil residue burns off.

PARTS DIAGRAM

#346000F550

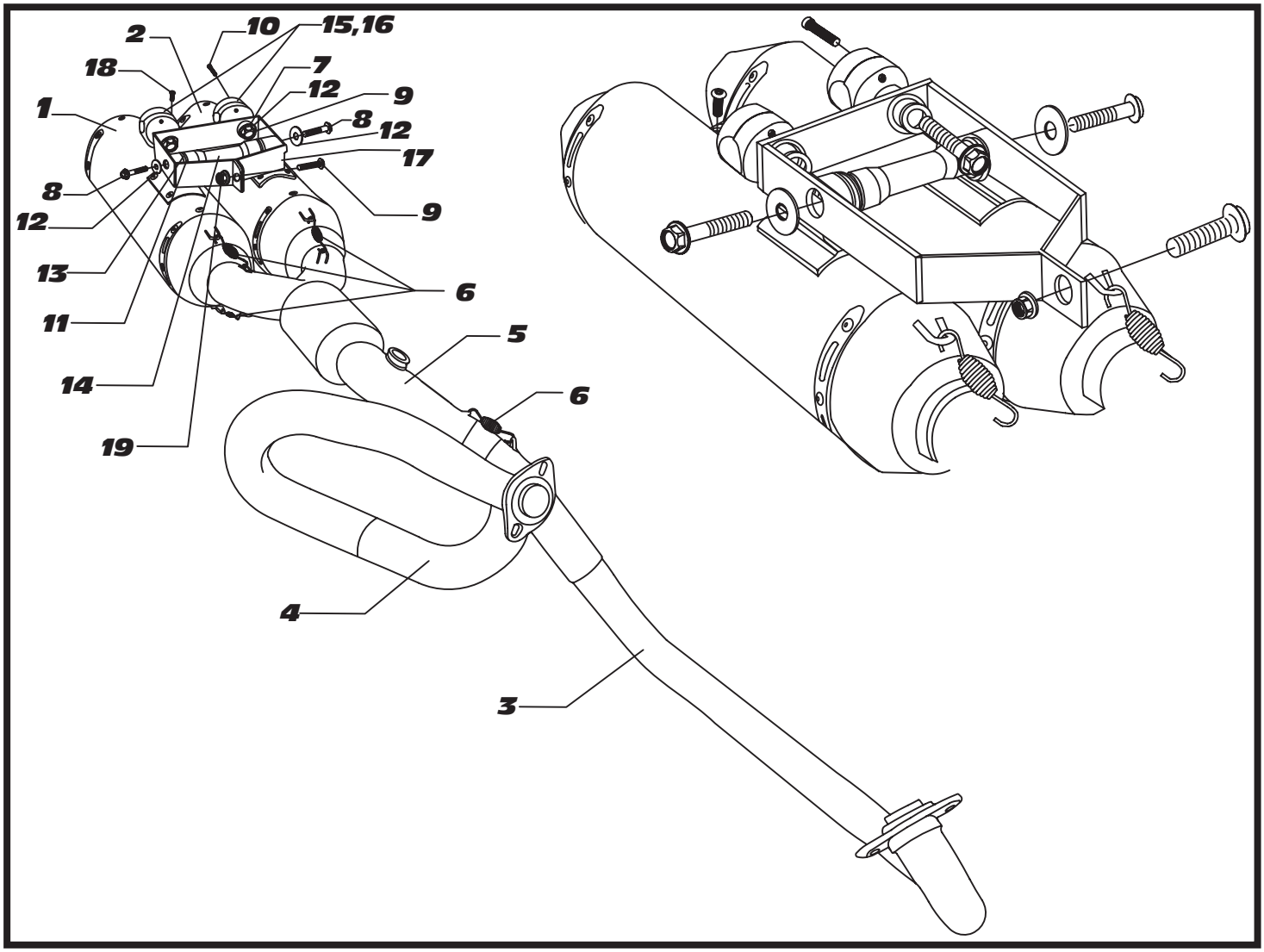

NO.	DESCRIPTION	QTY	PART #
1	Yoshimura Right Muffler Assembly	1	346000F550-RMA
2	Yoshimura Left Muffler Assembly	1	346000F550-LMA
3	Yoshimura Front Header	1	34600-101
4	Yoshimura Rear Header	1	34600-102
5	Yoshimura Tailpipe	1	34600-144
6	Short Exhaust Spring	6	RACE-SPX-1
7	Aluminum Bracket Rubber Grommet	2	Z1022
8	8mm X 40mm Flanged Hex Head Bolt	2	M8X40H
9	8mm X 16mm Flanged Hex Head Bolt	3	M8X16H
10	6mm X 20mm Socket Head Cap Screw	4	M6X20
11	Aluminum Spacer	2	ALS-001
12	8mm Washer Large	4	8MMWASHERL
13	Rubber Grommet	2	011257-00
14	2460 Muffler Mount Spacer	1	2460-SPC-00
15	Aluminum Muffler Mount	2	2460-BRKT-01
16	Aluminum Muffler Mount	2	2460-BRKT-02
17	Stainless Muffler Bracket	1	2460-BRKT-03
18	M6x6x1.0mm SS Buttonhead Screw	1	M6X6BHS
19	8mm Flanged Nut	1	8MMNUT
**	O2 Bung Plug	1	M18X13PLG
**	Offroad Endcap Plug	2	347PLUG
**	Spring Puller Tool	1	ST-200
**	Yoshimura Vinyl Sticker	1	17029
REPLACEMENT PARTS			
****	Spark Arrestor Kit		TEC-SD12
****	Muffler Repacking Kit		REPACK-RS2-PK14

Jetting Reccomendations:

Rejetting is recommended for optimum performance with DragonFire system.

Fuel Injection Mapping:

For best results and to extract the most performance out of the DragonFire System, fuel injection mapping is recommended using the Yoshimura PIM2 for closed course competition use only.

Mapping and further information will be available on the Yoshimura website at: www.yoshimura-rd.com

Note: It is illegal to modify the fuel system on any vehicle in the state of California.

2330 W Broadway Rd #112, Mesa, Arizona 85202 · (800) 708-9803 · FACSIMILE (602) 391-2279
WWW.DRAGONFIRERACING.COM

Spark Arrester Cleaning Information

Caution: **Muffler can be extremely hot. Let muffler cool down before removing spark arrester.**

Note: **Read through all instructions before beginning disassembly.**

Tools Needed:

4mm Allen Key, Wire Brush, Pair of Gloves, Safety Glasses

NO.	DESCRIPTION	QTY
1	Aluminum Ring	1
2	Spark Arrester	1
3	Spark Arrester Securing Bolt	1
4	Muffler Assembly	1

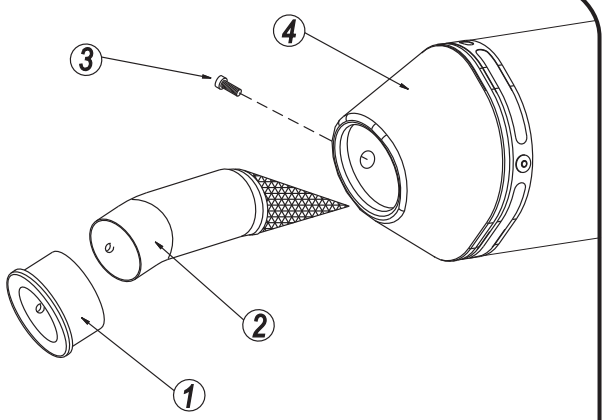

Parts Diagram

Cleaning Steps:

1 *Using a 4mm Allen key, remove the bolt that secures the aluminum ring and spark arrester to the muffler (see Parts Diagram for location).*

2 *Remove the spark arrester from the muffler.*

3 *Using a wire brush, remove carbon deposits from spark arrester screen. Inspect the screen for excessive wear or damage. If spark arrester is excessively worn or damaged, the spark arrester must be replaced. Cleaning and inspection should be performed at the same time as muffler repacking. Repacking is recommended every 8-10 hours of riding or 2 motos, whichever comes first.*

CAUTION: Gloves and safety glasses should be worn while cleaning spark arrester.

4 *Re-install spark arrester and aluminum ring. Torque the spark arrester securing bolt to 1.0 kg-m (7.3 lb-ft).*

NOTE: It is recommended that a low strength "Loc-tite" is used on the spark arrester securing bolt.

CAUTION: To maintain maximum sound and engine performance the muffler packing may need to be replaced every 300 miles. Failure to maintain the muffler packing may cause damage to the muffler and/or void the warranty. Regularly inspect the muffler and spark arrester for discoloration, cracks, or other signs of wear or damage caused by depleted muffler packing. If muffler packing is determined to be depleted or worn, a muffler repack kit is highly recommended to restore the muffler to optimum performance. Spark arrester inspection and muffler repack should be performed at same time.