YOSHIMURA
RESEARCH&DEVELOPMENT OF AMERICA, INC.
5420 DANIELS STREET STE A, CHINO CA. 91786 · (800)634-9166 · (909)628-4722 · FACSIMILE (909)591-2198
www.yoshimura-rd.com

RS-3 OVAL PERFORMANCE EXHAUST SYSTEM

HONDA '96-02 XR400

X460AFS-SA	*STAINLESS STEEL COMPETITION FULL SYSTEM*

THIS PRODUCT IS DESIGNED FOR USE IN CLOSED COURSE RACING AND IS NOT INTENDED FOR ANY OTHER USE.

CAUTION: The muffler packing on this system MUST be replaced every 6-8 hours of use, or after each moto. Failure to follow recommended muffler re-packing interval can cause muffler damage and may void the warranty.

NOTE: IN THE STATE OF CALIFORNIA, IT IS ILLEGAL TO MODIFY THE EMISSION CONTROL SYSTEM. WHICH INCLUDES THE CARBURETORS OF ANY VEHICLE.

Caution: Exhaust system can be extremely hot. Let motorcycle cool down before beginning installation.

Note: Read through all instructions before beginning installation.

Tools Needed:

10mm and 12mm sockets
3/8" ratchet and extension
6mm Allen bit for torque wrench
Torque wrench

Fig. 1

Installation Steps:

1 Remove right rear number plate. (See Fig. 1 for fastener locations.)

2 Remove stock exhaust system and exhaust port gaskets.

3 Install new exhaust port gaskets. (Honda part no. 18291-MN5-650)

4 Install Yoshimura header using stock exhaust nuts. Do not tighten at this time.

5 Slide one collector clamp onto header then install extension mid-pipe. (See Fig.3)

6 Slide the other collector clamp over tailpipe inlet then, install muffler and tailpipe assembly onto header extension pipe. (Note: Rotate extension mid-pipe for proper fit)

7 Bolt tailpipe to chassis mount using stock bolt. (Fig. 2) Do not tighten bolt at this point.

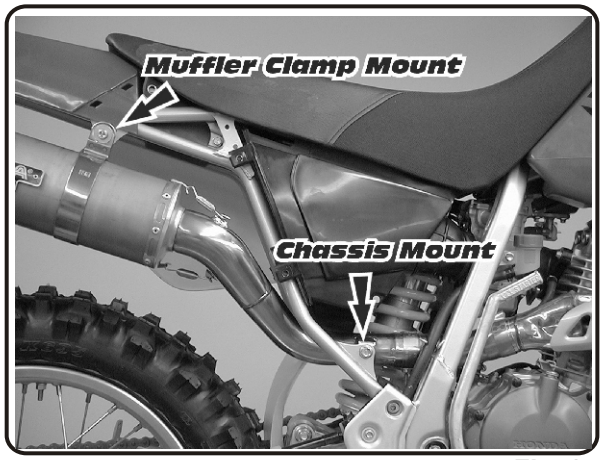

Fig. 2

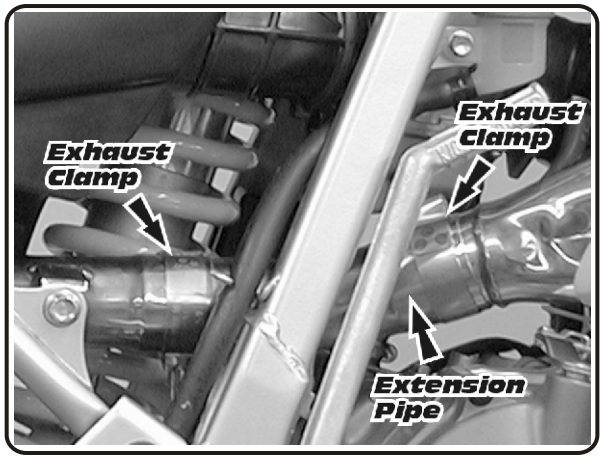

Fig. 3

8 Apply heat insulator to inside of muffler clamp and slide clamp onto muffler.
(Note direction of clamp in Fig. 4)

9 Mount clamp to stock muffler clamp mount using supplied bolt and spacer. (See Fig.4)

10 Torque muffler clamp and chassis mount bolt To 2.5 kg-m (18 l-ft).

11 Torque collector clamps to 1kg-m (7.3 lb-ft). (Make sure clamps do not interfere with shock.)

12 Remove heat shield from stock header and install onto Yoshimura header using stock bolts.

13 It is recommended that the muffler and tailpipe be wiped down with rubbing alcohol to remove oil and fingerprints. This will help prevent tarnishing of the finish after the exhaust is heated up.

14 Check for proper clearance between new exhaust system and rear suspension (i.e. tire, swing-arm, brake, etc). If any problem is found, please carefully follow through the installation steps again. If problem still persists, please call Yoshimura tech. Dept. at (800)634-9166.

15 Reinstall number plate.

16 Check for proper clearance between new exhaust system and number plate.

NOTE: After starting motorcycle, it is normal for new exhaust system and muffler to emit smoke until oil residue burns off.

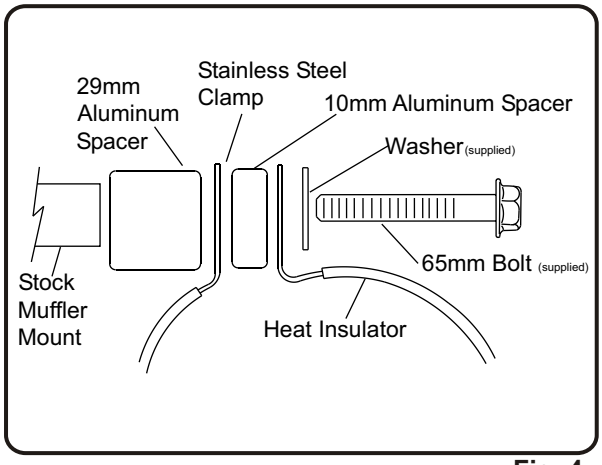

Fig. 4

#X460AFS-SA

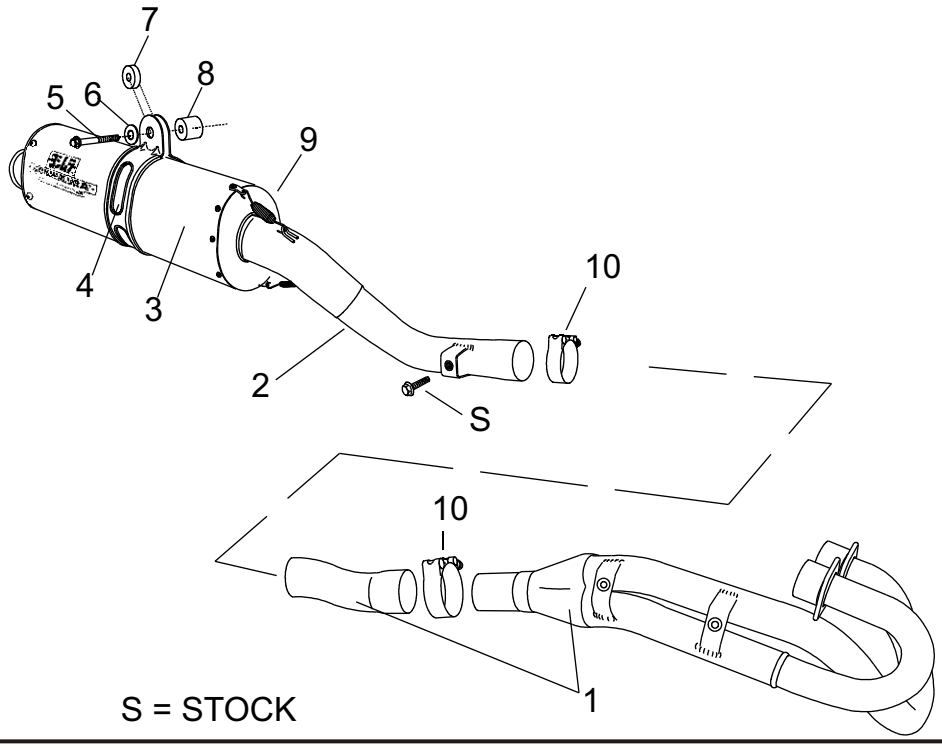

Parts Diagram

NO.	DESCRIPTION	QTY	PART #
1	Yoshimura Header Stainless Steel Competition (2 Piece)	1	X460SRRH
2	Yoshimura Tailpipe Stainless Steel Competition	1	X460ASRT
3	RS-3 Oval Muffler Assembly	1	**
4	Stainless Steel Muffler Clamp	1	COS400S8ALX
5	8mm X 65mm Flange Head Bolt	1	M8X65H
6	8MM Large Flat Washer	1	8MMWASHERL
7	10mm Aluminum Spacer	1	8X10SPC
8	22mm Aluminum Spacer	1	8X29SPC
9	2.5" Muffler Spring	2	RACE-SPS
10	Collector Clamp	2	200-59
**	Spring Puller Tool	1	ST-100
**	Muffler Clamp Heat Insulator	1	HT SHLD-14B
**	Yoshimura Vinyl Sticker	2	17028

Bolt Guide (Actual Size):

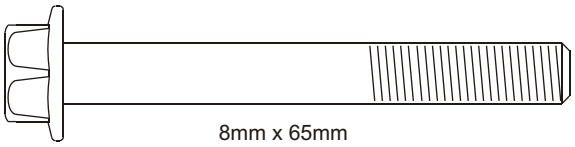

8mm x 65mm
Flange Hex Bolt

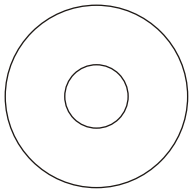

8mm Large Flat Washer

YOSHIMURA

RESEARCH&DEVELOPMENT OF AMERICA, INC.

www.yoshimura-rd.com

TEC-SA Spark Arrester Cleaning Information

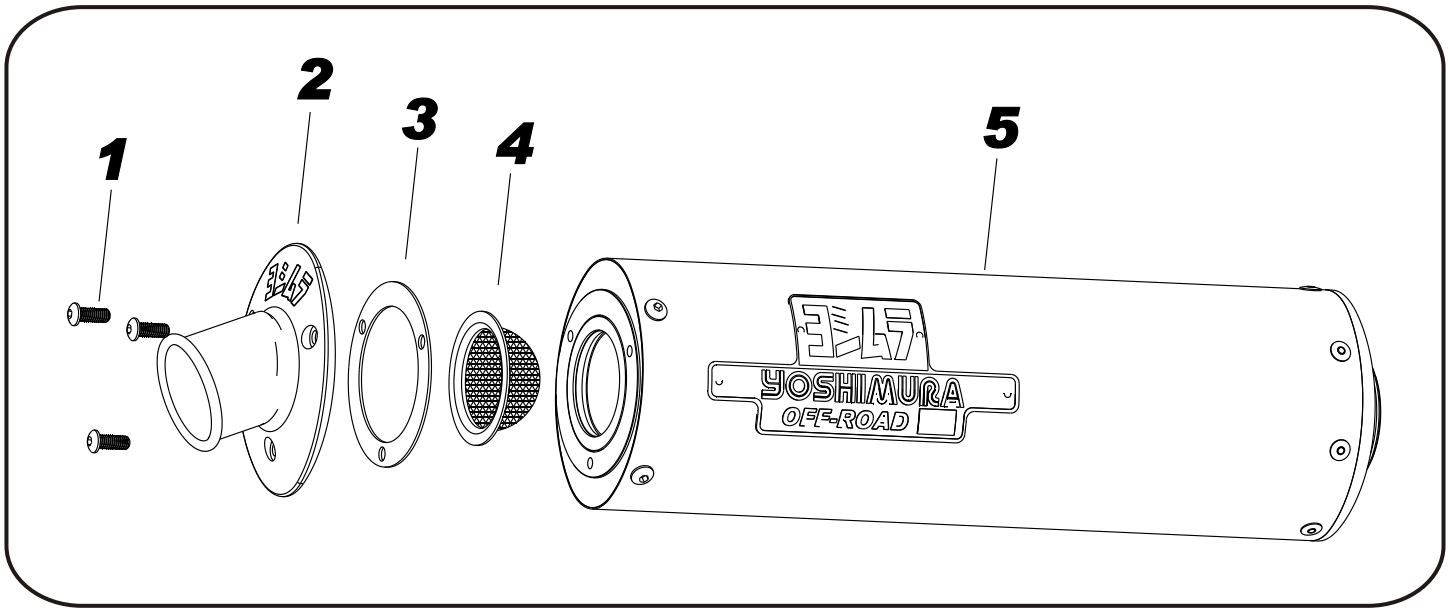

Parts Diagram

Caution: Muffler can be extremely hot. Let muffler cool down before removing spark arrester.

Note: Read through all instructions before beginning disassembly.

NO.	DESCRIPTION	QTY
1	6 x 1.0mm x 16mm Button Head Screw	3
2	4.0" YRD End Cap, Cover	1
3	T.E.C. End Cap, Gasket	1
4	T.E.C. End Cap, Spark Arrester	1
5	Muffler Assembly	1

Tools Needed:

4mm Allen Key
Wire Brush
Pair of Gloves
Safety Glasses

Cleaning Steps:

1 Using a 4mm Allen key remove the three 6mm x 16mm Button Head Screws located in the muffler end cap. (See Parts Diagram for location)

2 Remove the end cap, gasket and spark arrester from the muffler.

3 Using a wire brush remove carbon deposits from spark arrester screen. Once clean inspect the screen for excessive wear or damage, if any is found the spark arrester must be replace. Cleaning and inspection should be performed after every 60 hours of use.
(Caution: Gloves and Safety Glasses should be worn while cleaning spark arrester.)

4 Re-install spark arrester, gasket, end cap and 6mm x 16mm screws into muffler assembly. Torque screws to 1.0 kg-m (7.3 lb-ft)
(Note: It is recommended that a low strength "Loc-tite" is used on the screws.)