YOSHIMURA
RESEARCH&DEVELOPMENT OF AMERICA, INC.
5420 DANIELS STREET STE A, CHINO CA. 91786 · (800)634-9166 · (909)628-4722 · FACSIMILE (909)591-2198
www.yoshimura-rd.com

RS-3 OVAL PERFORMANCE EXHAUST SYSTEM

HONDA '91-01 XR650L

X661AS-SA | *STAINLESS STEEL COMPETITION SLIP ON SYSTEM*

THIS PRODUCT IS DESIGNED FOR USE IN CLOSED COURSE RACING AND IS NOT INTENDED FOR ANY OTHER USE.

CAUTION: The muffler packing on this system MUST be replaced every 6-8 hours of use, or after each moto. Failure to follow recommended muffler re-packing interval can cause muffler damage and may void the warranty.

NOTE: IN THE STATE OF CALIFORNIA, IT IS ILLEGAL TO MODIFY THE EMISSION CONTROL SYSTEM. WHICH INCLUDES THE CARBURETORS OF ANY VEHICLE.

Caution: Exhaust system can be extremely hot. Let motorcycle cool down before beginning installation.

Note: Read through all instructions before beginning installation.

Tools Needed:

10mm, 11mm (7/16") and 12mm sockets
3/8" ratchet and extension
6mm Allen bit for torque wrench
Torque wrench

Installation Steps:

1 Remove right rear number plate.
(See Fig. 1 for fastener locations.)

2 Remove stock muffler.

3 Install aluminum bracket using stock and supplied bolts. Note that turn signal mounts behind aluminum bracket. (See Fig. 2)

4 Install supplied graphite gasket onto stock header inlet.

5. Slide collector clamp over tailpipe inlet and install onto header. (See parts diagram on page 4.)

6 Bolt tailpipe to lower chassis mount using supplied bolt and washer. (See Fig. 3) Do not tighten bolt at this point.

Fig. 1

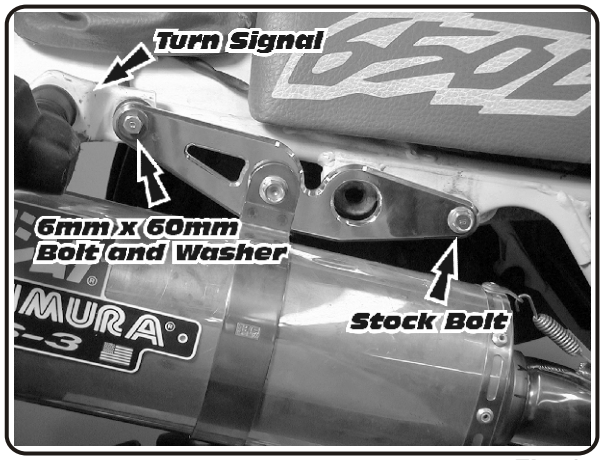

Fig. 2

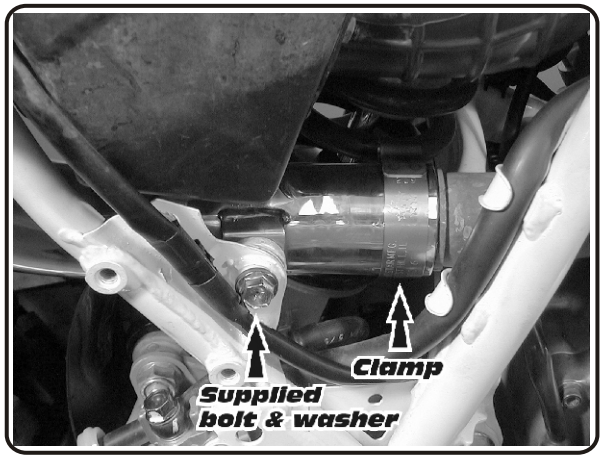

Fig. 3

7 Apply heat insulator to inside of muffler clamp and slide clamp onto muffler. (Note direction of clamp in Fig. 4)

8 Mount clamp to aluminum bracket using supplied bolt, washer and nut. (See Page 4).

9 Torque muffler clamp and chassis mount bolts to 2.5 kg-m (18 lb-ft).

10 Torque collector clamp to 1.0 kg-m (7.3 lb-ft).

11 It is recommended that the muffler and tailpipe be wiped down with rubbing alcohol to remove oil and fingerprints. This will help prevent tarnishing of the finish after the exhaust is heated up.

12 Check for proper clearance between new exhaust system and rear suspension (i.e. tire, swing-arm, brake, etc). If any problem is found, please carefully follow through the installation steps again. If problem still persists, please call Yoshimura tech. Dept. at (800)634-9166.

13 Reinstall number plate.

14 Check for proper clearance between new exhaust system and number plate.

Note: After starting motorcycle, it is normal for new exhaust system to emit smoke until oil residue burns off.

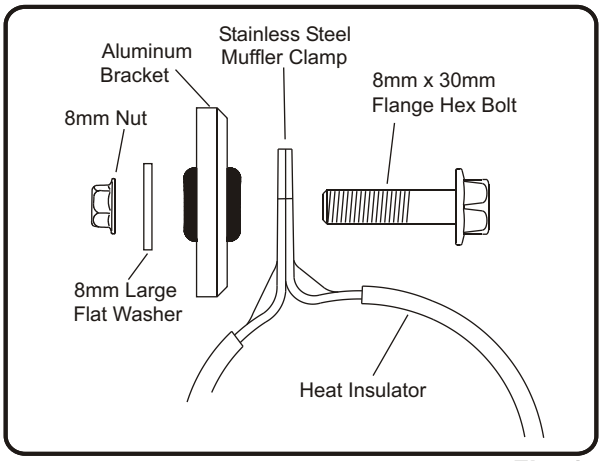

Fig. 4

#X661AS-SA

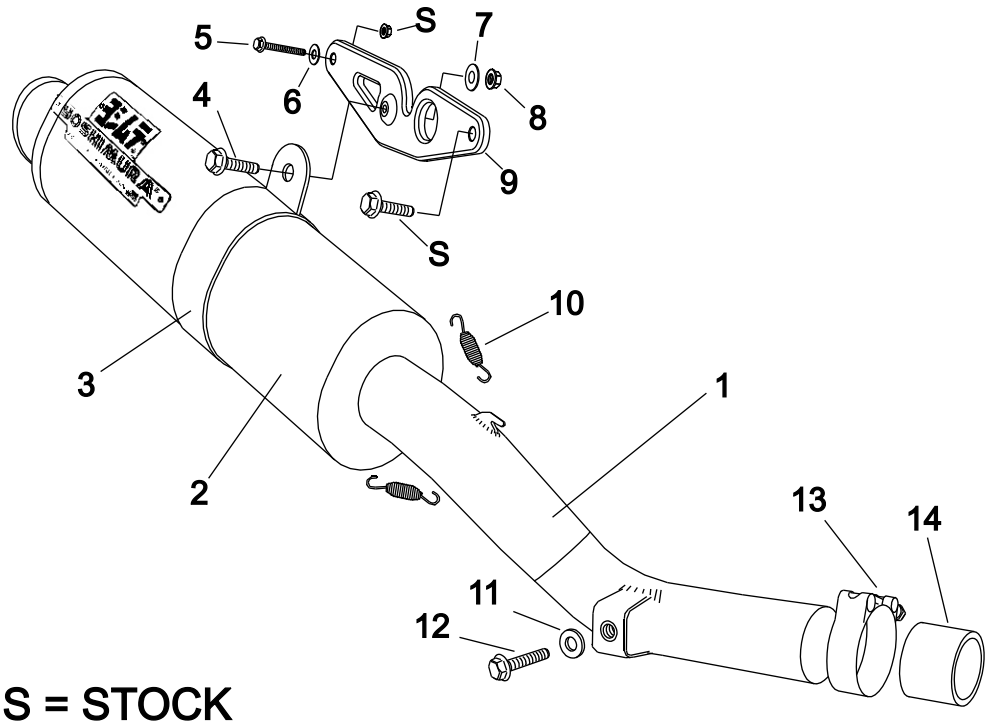

S = STOCK

NO.	DESCRIPTION	QTY	PART #
1	Yoshimura Tailpipe Stainless Steel Competition	1	X661ASRT
2	RS-3 Oval Muffler Assembly	1	**
3	Stainless Steel Muffler Clamp	1	COS450S8ALX
4	8mm x 30mm Flange Hex Bolt	1	M8X30H
5	6mm x 60mm Hex Socket Head Bolt	1	M6X60
6	6mm Flat Washer	1	6MMWASHER
7	8mm Large Flat Washer	1	8MMWASHERL
8	8mm Flange Nut	1	8MMNUT

NO.	DESCRIPTION	QTY	PART #
9	Aluminum Muffler Bracket	1	XR650AB
10	2.5" Exhaust Spring	2	RACE-SPS
11	8mm Flat Washer	1	8MMWASHER
12	8mm x 25mm Flange Hex Bolt	1	M8X25H
13	Collector Clamp	1	200-60
14	Graphite Gasket	1	16-5569
**	Spring Puller Tool	1	ST-100
**	Muffler Clamp Heat Insulator	1	HT SHLDTRS
**	Yoshimura Vinyl Sticker	2	17028

Nut and Bolt Guide (Actual Size):

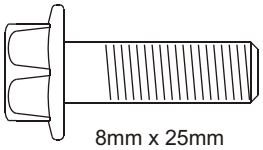

8mm x 25mm
Flange Hex Bolt

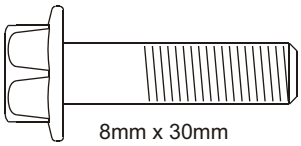

8mm x 30mm
Flange Hex Bolt

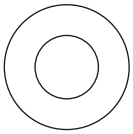

8mm Flat Washer

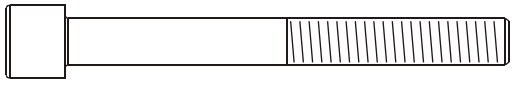

6mm x 60mm
Hex Socket Head Bolt

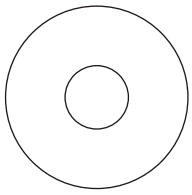

8mm Large Flat Washer

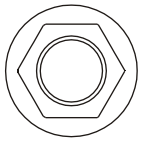

8mm Flange Nut